Lubricating Equipment
Metering Technology for Grease and Oil
High Pressure Hydraulic
Customised Developments

ABNOX®
High Pressure Hydraulic & Lubrication

Original Operating Instructions

in accordance with the Machines Directive 2006/42/EC

CE

Models **AXFP2**
AXFP3
AXFP4

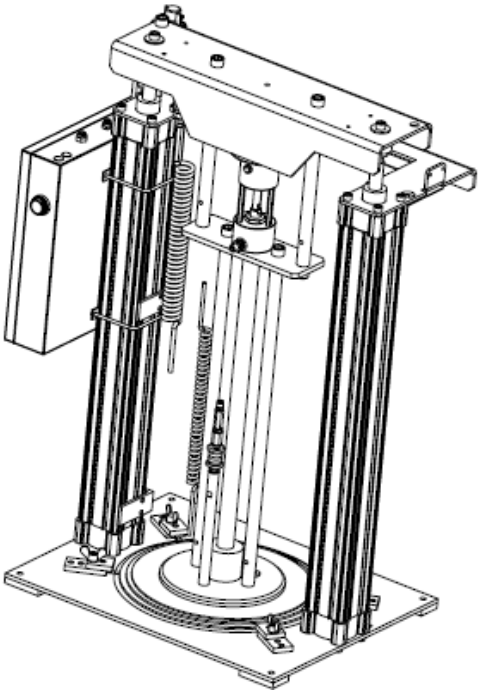

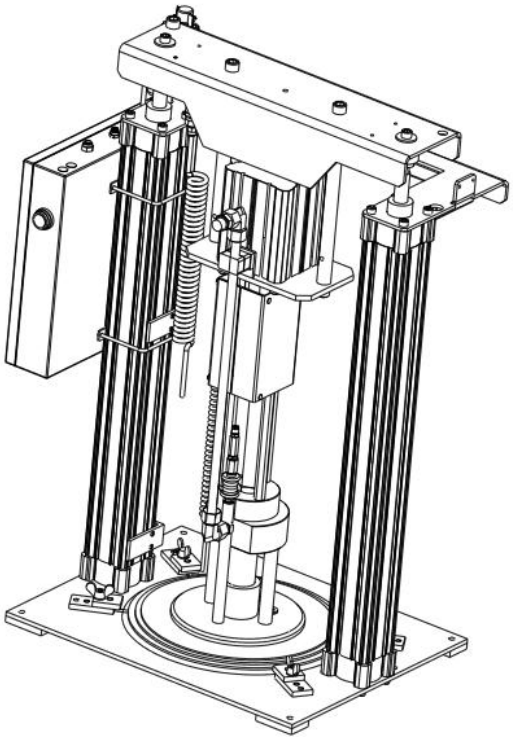

ABNOX AG
Langackerstrasse 25
CH-6330 Cham
Switzerland

Tel. +41 (0) 41 780 44 55
Fax +41 (0) 41 780 44 50

E-mail info@abnox.com
Internet www.abnox.com

© copyright of the publisher
This document may be copied, translated or make accessible to third parties with the express approval of the publisher only.

About the operating instructions
These operating instructions are part of the system/device and are included in the scope of delivery in the event of a resale.

EC declaration of conformity

according to the EU Machinery Directive 2006/42/EG, Annex II, 1.A

Manufacturer:

ABNOX AG,
Langackerstrasse 25
6330 Cham

Description and identification of the machinery:

Product / Article:	Fassförderpumpe 14 -25 kg
Type:	AXFP2-S10, AXFP2-S25, AXFP2-S60
Project number:	PRJ-2011-09-00006
Project name:	PR000273
Commercial name:	Druckluftfasspumpen
Function:	Fördern von mittel bis hochviskose Schmierstoffe

It is expressly declared that the machinery fulfils all relevant provisions of the following EU Directives:

2006/42/EG:2006-05-17	EU Machinery Directive 2006/42/EG
2006/42/EC:	Richtlinie 2006/42/EG des Europäischen Parlaments und des Rates vom 17. Mai 2006 über Maschinen und zur Änderung der Richtlinie 95/16/EG (Neufassung) (1)

Reference to the harmonised standards used, as referred to in Article 7(2):

EN ISO 14121-1:2007	Sicherheit von Maschinen - Risikobeurteilung - Teil 1: Leitsätze (ISO 14121-1:2007)
EN ISO 13850:2008	Sicherheit von Maschinen - Not-Halt - Gestaltungsleitsätze (ISO 13850:2006)
EN 574:1996+A1	Sicherheit von Maschinen - Zweihandschaltungen - Funktionelle Aspekte - Gestaltungsleitsätze
EN ISO 12100:2010-11	Sicherheit von Maschinen - Allgemeine Gestaltungsleitsätze - Risikobewertung und Risikominderung (ISO 12100:2010)

Reference of the other technical standards and specifications used:

EN 954-1:1996-12	Sicherheit von Maschinen - Sicherheitsbezogene Teile von Steuerungen - Teil 1: Allgemeine Gestaltungsleitsätze

Cham, 07.09.2011

Place, date

Signature
Roberto Bernich
Leiter Qualitätssicherung

EC declaration of conformity

according to the EU Machinery Directive 2006/42/EG, Annex II, 1.A

Manufacturer:

ABNOX AG,
Langackerstrasse 25
6330 Cham

Description and identification of the machinery:

Product / Article:	Fassförderpumpe 25 -50 kg
Type:	AXFP3-S10, AXFP3-S25, AXFP3-S60, AXFP3-M20, AXFP3–M40
Project number:	PRJ-2011-09-00007
Project name:	PR000273a
Commercial name:	Druckluftfasspumpen
Function:	Fördern von mittel bis hochviskose Schmierstoffe

It is expressly declared that the machinery fulfils all relevant provisions of the following EU Directives:

2006/42/EG:2006-05-17	EU Machinery Directive 2006/42/EG
2006/42/EC:	Richtlinie 2006/42/EG des Europäischen Parlaments und des Rates vom 17. Mai 2006 über Maschinen und zur Änderung der Richtlinie 95/16/EG (Neufassung) (1)

Reference to the harmonised standards used, as referred to in Article 7(2):

EN ISO 14121-1:2007	Sicherheit von Maschinen - Risikobeurteilung - Teil 1: Leitsätze (ISO 14121-1:2007)
EN ISO 13850:2008	Sicherheit von Maschinen - Not-Halt - Gestaltungsleitsätze (ISO 13850:2006)
EN 574:1996+A1	Sicherheit von Maschinen - Zweihandschaltungen - Funktionelle Aspekte - Gestaltungsleitsätze
EN ISO 12100:2010-11	Sicherheit von Maschinen - Allgemeine Gestaltungsleitsätze - Risikobewertung und Risikominderung (ISO 12100:2010)

Reference of the other technical standards and specifications used:

EN 954-1:1996-12	Sicherheit von Maschinen - Sicherheitsbezogene Teile von Steuerungen - Teil 1: Allgemeine Gestaltungsleitsätze

Cham, 07.09.2011

Place, date

Signature
Roberto Bernich
Leiter Qualitätssicherung

EC declaration of conformity

according to the EU Machinery Directive 2006/42/EG, Annex II, 1.A

Manufacturer:

ABNOX AG,
Langackerstrasse 25
6330 Cham

Description and identification of the machinery:

Product / Article:	Fassförderpumpe 180 kg
Type:	AXFP4-S10, AXFP4-S25, AXFP4-S60, AXFP4-M20, AXFP4-M40, AXFP-M60
Project number:	PRJ-2011-09-00008
Project name:	PR000273b
Commercial name:	Druckluftfasspumpen
Function:	Fördern von mittel bis hochviskose Schmierstoffe

It is expressly declared that the machinery fulfils all relevant provisions of the following EU Directives:

2006/42/EG:2006-05-17	EU Machinery Directive 2006/42/EG
2006/42/EC:	Richtlinie 2006/42/EG des Europäischen Parlaments und des Rates vom 17. Mai 2006 über Maschinen und zur Änderung der Richtlinie 95/16/EG (Neufassung) (1)

Reference to the harmonised standards used, as referred to in Article 7(2):

EN ISO 14121-1:2007	Sicherheit von Maschinen - Risikobeurteilung - Teil 1: Leitsätze (ISO 14121-1:2007)
EN ISO 13850:2008	Sicherheit von Maschinen - Not-Halt - Gestaltungsleitsätze (ISO 13850:2006)
EN 574:1996+A1	Sicherheit von Maschinen - Zweihandschaltungen - Funktionelle Aspekte - Gestaltungsleitsätze
EN ISO 12100:2010-11	Sicherheit von Maschinen - Allgemeine Gestaltungsleitsätze - Risikobewertung und Risikominderung (ISO 12100:2010)

Reference of the other technical standards and specifications used:

EN 954-1:1996-12	Sicherheit von Maschinen - Sicherheitsbezogene Teile von Steuerungen - Teil 1: Allgemeine Gestaltungsleitsätze

Cham, 07.09.2011

Place, date

Signature
Roberto Bernich
Leiter Qualitätssicherung

DE_deutsch	**„deutsche“ Übersetzung der original Betriebsanleitung** auf dem Internet unter **www.abnox.com** abrufbar.
EN_english	**Instructions for Use**
FR_français	**Manuel d'utilisation**
IT_italiano	**Istruzioni d’uso**
ES_español	**Manual de Instrucciones**
NL_nederlands	**Gebruiksaanwijzing**
PL_polski	**Instrukcja obsługi**
DA_dansk	**Brugervejledning**
HU_magyar	**Eredeti használati utasítás**
CS_čeština	**Původní návod k obsluze**

Contents

1 SAFETY INFORMATION 8

1.1 INTENDED USE 8
1.2 OBLIGATIONS OF THE OPERATOR 8
1.3 BASIC SAFETY INFORMATION 8
1.4 SAFETY AND HAZARD SYMBOLS 9
1.5 SAFETY INFORMATION FOR USING THE PRODUCT 9
1.6 SPECIAL TYPES OF HAZARD 9
1.6.1 ELECTRICAL ENERGY 9
1.6.2 HYDRAULIC AND PNEUMATIC ENERGY 9
1.7 MAINTENANCE, SERVICING AND TROUBLESHOOTING 10
1.8 WARRANTY AND LIABILITY 10

2 PRODUCT DESCRIPTION 10

2.1 APPLICATION 10
2.2 IDENTIFICATION 11
2.3 FUNCTION 11
2.4 OVERALL VIEW / DESIGNATION 12
2.4.1 TECHNICAL DETAILS 50 KG 14
2.4.2 TECHNICAL DETAILS 50 KG 15

3 PACKAGING AND TRANSPORT 16

3.1 TRANSPORT DAMAGE 16
3.2 INTERIM STORAGE 16

4 TRAINING 16

5 ASSEMBLY, SETTING UP / INSTALLATION 16

6 INTERFACE DEFINITION 16

7 INITIAL COMMISSIONING 17

8 OPERATION 18

8.1 OPERATING ELEMENTS 18
8.2 INSERT CONTAINER 19
8.3 RETRACT PUMP INTO CONTAINER 19
8.4 CONVEYING LUBRICANTS 20
8.5 EXTRACT FOLLOWER PLATE FROM THE CONTAINER 20
8.6 REPLACING CONTAINERS 20
8.7 MAINTENANCE UNIT 21
8.7.1 CHECK VALVE 21
8.7.2 AIR FILTER 21

9 FAULT SEARCH, FAULT RECTIFICATION 21

9.1 FAULT – CAUSE – RECTIFICATION 21

10 CUSTOMER SERVICE/SUPPORT 22

11 MAINTENANCE 22

11.1 MAINTENANCE PLAN 22

12 DECOMMISSIONING 22

12.1 SHORT-TERM INTERRUPTION 22
12.2 LONG-TERM INTERRUPTION 22
12.3 SHUTDOWN OF THE PLANT 23

13 AUXILIARY AND OPERATING SUPPLIES 23

14 SPARE PARTS 23

15 RESALE 23

16 DECOMMISSIONING AND DISPOSAL 23

17 OPTIONS 23

1 Safety information

Please read through this operating manual carefully to make yourself familiar with the safe and efficient operation of this product. Keep this handbook for reference purposes.

This operating manual contains important regulations and information for the safe and professional operation of the equipment/the device. It is also meant to help the operating and maintenance personnel to avoid hazards, to reduce repair costs and failure times and to increase the reliability and the lifespan of the equipment/the device. Therefore it is very important to guarantee access to this document for anyone who is assigned with the support of the equipment/the device.

1.1 *Intended use*

The equipment/the device may be used only in the intended operating conditions.
Any other use over and above that is not deemed as intended use. The manufacturer shall not be liable for any damages resulting from unintended use.

The following are also part of intended use:

- Following and adhering to all the information from the operating manual.
- Adherence to the inspection and maintenance work.



Improper use
The manufacturer shall not be liable for any damages that may be attributed to an improper use of the equipment/the device.

1.2 *Obligations of the operator*

By the person responsible for safety it shall be ensured that:

- Only qualified personnel is assigned to work with the machinery and devices
- These persons always have among other the operating manual and other documents of the product documents when doing the job and obligated to follow these documents.
- Unqualified personnel are not permitted to work with the equipment
- The rules and regulations for accident prevent that are applicable for the place of use and the adherence to the maintenance work are followed.

Only qualified personnel who due to their education, experience and training and knowledge about the relevant standards, regulations, accident prevention rules and operating conditions have been authorised by the person responsible for the safety of the equipment to carry out necessary tasks and who know and can avoid the hazards may be permitted to work with equipment.

The responsibilities of the personnel are clearly defined for the assembly, commissioning, operation, setting-up, maintenance, storage and repair.

Trainees may work at the equipment only under the supervision of qualified personnel.

The safety information and safety requirements are described below and with this safety information no claim is raised on the completeness of the information.

1.3 *Basic safety information*

The following are the basic requirements for the safe handling and trouble-free operation of this equipment/device:

- May not be used alienated from its purpose.
- No modifications may be carried out at the equipment/device. Should this happen, then the customer shall have the sole responsibility. For desired modifications please speak to ABNOX AG.
- The safe operational condition of the equipment/device should be guaranteed at all times. An inspection on the function and damages should be conducted regularly by the qualified personnel. The disassembly may be carried out only by authorised personnel using the operating manual. On request we will conduct device training to bring your personnel to the required level of knowledge.
- The customer is responsible for complying with all the necessary safety measures.
- Do not use the equipment/device when it is directed towards people.
- During maintenance work disconnect the device from the compressed air / lubricant pipe.
- All the pipes, hoses and screws must be regularly inspected for leaks and externally recognisable damages. Remove damages immediately!

- If sensors are in the magnetic fields or exposed to such forces, it may lead to malfunction of sensors.
- The cleanliness and clear arrangement of the work area at and around the equipment/device should be ensured and inspected through regular checks.
- The rules and regulations for accident prevention applicable for the place of use must be followed.
- Safety equipments may be removed only after bringing the equipment to a standstill and protecting the equipment/device from being started again.
- Before each operation of the equipment/device all the safety equipments must be attached professionally and must be functional.
- The required personal safety equipments should be provided by the operating company.
- Safety equipments and safety devices must be checked regularly.

1.4 *Safety and hazard symbols*



WARNING AGAINST A HAZARD AREA
Warning information is information about the hazards that may lead to bodily injuries and/or material damages.



NOTE
Hint symbols give you valuable information and practical tips.



Crushing hazard
Warning against crushing hazard



ELECTRICAL VOLTAGE
Warning against fatal electrical voltage.



ENVIRONMENTAL HAZARD
Protection of the environment through professional disposal of various materials and their delivery of disposal.

1.5 *Safety information for using the product*

All devices and assemblies have been developed and built according to the state-of-the-art technology and recognised safety-relevant rules. Nevertheless there may be hazards for the users or third parties or damages to the equipment/device or other material assets in case of improper use or handling.

The equipment/device should be used only:

- For intended use.
- In safe and faultless condition.
- Malfunctions impairing the safety should be removed immediately.

1.6 *Special types of hazard*

1.6.1 Electrical energy



ELECTRICAL VOLTAGE
Working with electrical components should be done only by an electrician or under the guidance and supervision of an electrician in accordance with electrical rules.

1.6.2 Hydraulic and pneumatic energy



HYDRAULIC AND PNEUMATIC SYSTEMS
Assign work at the hydraulic and pneumatic equipments only to personnel with special knowledge and experience in hydraulics and pneumatics!

1.7 *Maintenance, Servicing and Troubleshooting*

- Prescribed adjustment and maintenance works should be carried out according to the maintenance schedule within the stipulated time.
- Inform operating personnel before adjustment and maintenance works.
- The main switch should be switched off.
- Separate the mains plug from the network and secure against unintended operation.
- The pneumatic / hydraulic system must be pressureless.
- Check all the screw and fitting connections for firm position.
- After completing the work all the functions and safety equipments should be checked immediately.



WARNING
All the works at the equipments/device should be carried out only when the equipment is at standstill.



ENVIRONMENTAL HAZARD
Various materials / fluids should be handled professionally and separated in accordance with respective regulations customary to the country and supplied for disposal.

1.8 *Warranty and liability*

In essence written agreements defined in writing in advance shall be applicable.

Warranty and liability claims in case of personal injuries and material damages are excluded, if they can be attributed to one or more of the following causes:

- Unintended use of the equipment/device.
- Works carried out by unqualified persons (as mentioned).
- Improper transport, storage, assembly, commissioning, operation and maintenance of the equipment/device.
- Non-compliance with the information in the operating manual related to safety, storage, assembly, commissioning, operation, maintenance and setting-up of the equipment/device. Operating the equipment/device with defective safety equipments or in case of safety and protective equipments that have not been installed properly or are not functional.
- Unauthorised changes to the equipment/device.
- Unauthorised changes to the pressure conditions during pressure protection.
- Unsatisfactory monitoring of the machine parts that are subject to wear.
- Improper repairs and use of foreign parts.
- Catastrophic events, caused by the effect of foreign substances and acts of God.

2 Product description

2.1 *Application*

The plant is for the exclusive use of conveying the following media:

- Lubricant viscosity NLGI 4 / 1,000,000 mPa or below
- Container size in accordance with data sheet (sections 2.4.1 – 2.4.3)



WARNING
Use of other media may result in faults, damage or even destruction of the plants.

2.2 *Identification*

The barrel supply pump is indicated by the type plate fitted to the rear of the control cabinet.
The type plate contains information on the identification of the device.

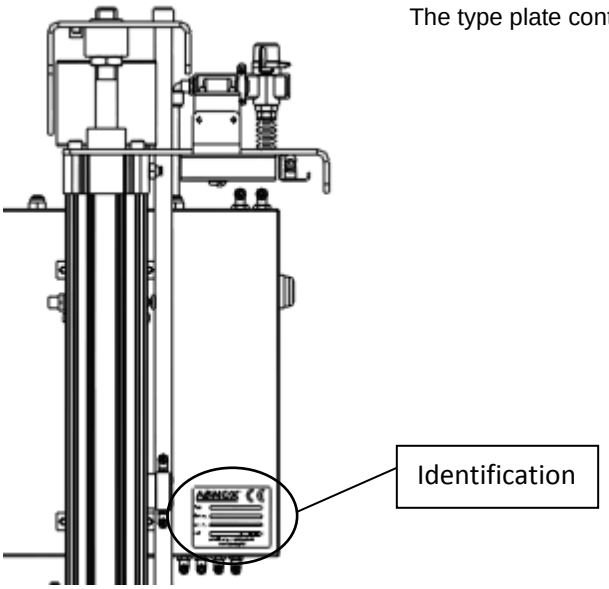

NOTE
To order spare parts and for technical support, the data on the type plate must be provided.

2.3 *Function*

Pneumatic ABNOX barrel supply pumps are used to supply lubricants from original containers of up to 180 kg. With the use of the adjustable follower plate pressure, the suction behaviour of the standard ABNOX pumps is improved significantly, as the medium is pressed on the suction nozzle by force. This can also avoid the follower plate from getting stuck, for instance at a seam.

A pneumatic empty message stops the pumping process at the lowest filling level of the container and signals this conditions with a warning signal (option). Switching off the pump avoids the suction of air when the container is empty and the cumbersome ventilation of the entire system, incl. the high medium loss resulting from this. To replace a barrel, the two-hand switch can be used to conveniently drive the follower plate out of the container without using much force.

The barrel supply pumps can be delivered in various pressure transmissions and pump types (silicon grease pumps, maxi pumps).

2.4 *Overall view / designation*

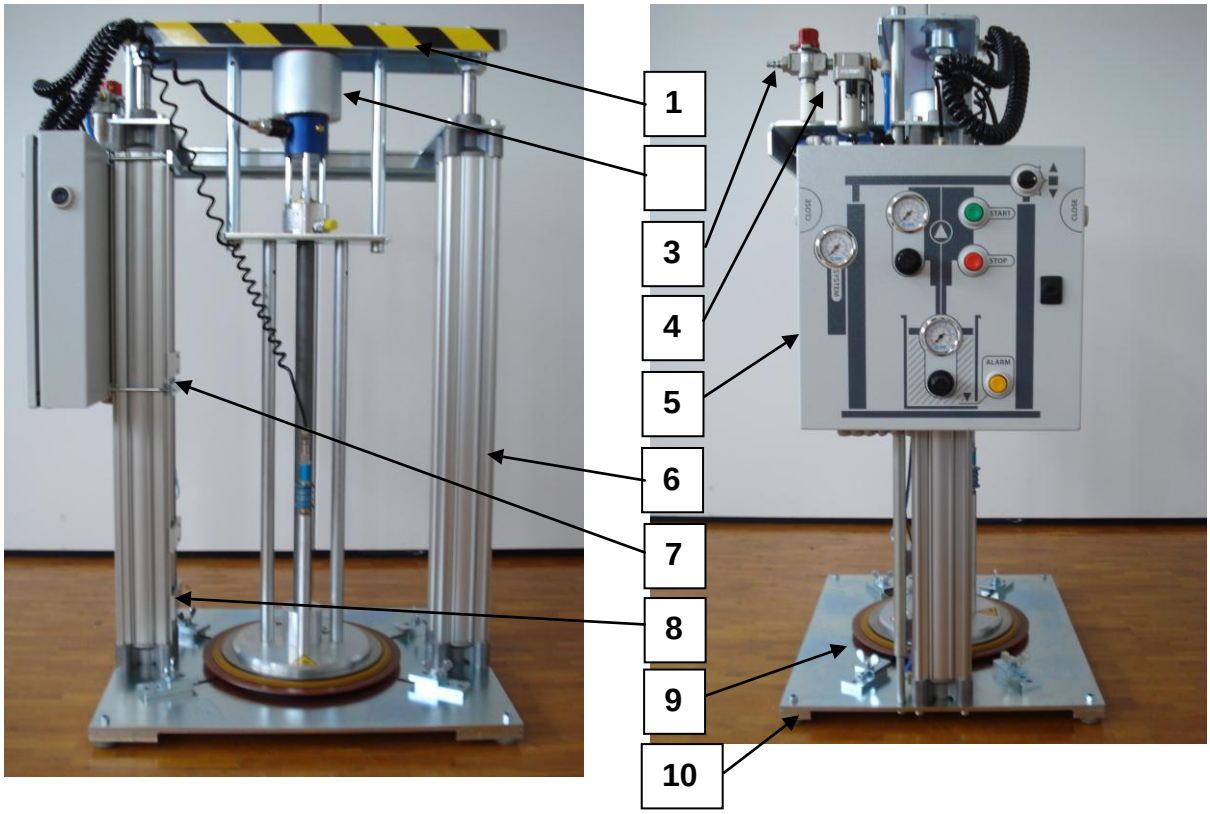

1	**Pump lever** The pump lever lifts and lowers the barrel supply pump with the follower piston plate.
2	**Supply pump** The supply pump conveys the lubricants.
3	**Lockable check valve with pressure release**
4	**Maintenance unit with integrated water separator for barrel supply pump**
5	**Control box** The pneumatic valves and operating elements are fitted in this control box.
6	**Pneumatic cylinder** They lift and lower the pump lever and create the pressure force for the follower piston plate.
7	**End switch for conveyor operation** Settings: The top end switch (X) may only be switched on after the complete retraction of the follower piston plate in the container.
8	**End switch for switch-off automatics (L)**
9	**Follower piston plate** The follower piston plate creates pressure with the two pneumatic cylinders on the content of the container and presses it into the conveyor pump.
10	**Base frame** It bears the entire construction and must be fastened to the ground.

⚠	**WARNING** End switches 7 and 8 (Section 2.4) may be set by specialist staff only. Screw off lateral covering sheet to make adjustments.

Top end switch (X) not operated.
Plant runs with two-hand control only.

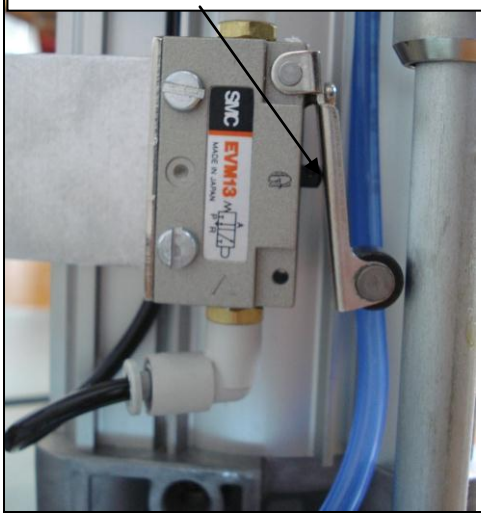

Top end switch (X) operated.
Plant runs in conveyor mode and with two-hand control.
see also safety notes.

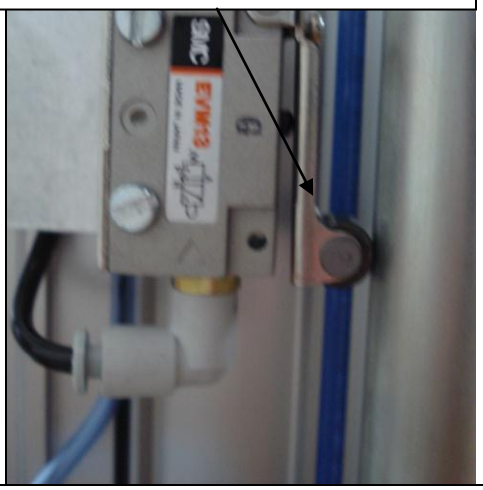

2.4.1 Technical details Typ S

Container	25 kg			50 kg			180 kg		
Artikel-Number	AXFP2 S10	AXFP2 S25	AXFP2 S25	AXFP3 S10	AXFP3 S25	AXFP3 S60	AXFP4 S10	AXFP4 S25	AXFP4 S60
Pressure ratio	10:1	20:1	60:1	10:1	20:1	60:1	10:1	20:1	60:1
Output at motor [cm^3/min]	1720	1295	465	1720	1295	465	1720	1295	465
Construction type pump	Typ S								
Container high max. [mm]	680								
Container-internal-Ø min. [mm]	260								
Container-internal-Ø max. [mm]	410								
Operating pressure at 6 bar [bar]	60	140	310	60	140	310	60	140	310
Max. Pressure [bar]	100	233	516	100	233	516	100	233	516
a [mm]	520								
b [mm]	480								
c [mm]	12								
d [mm]	600								
e [mm]	640								
f [mm]	774								
H min. [mm]	845			1092					
H max. [mm]	1361			1827					

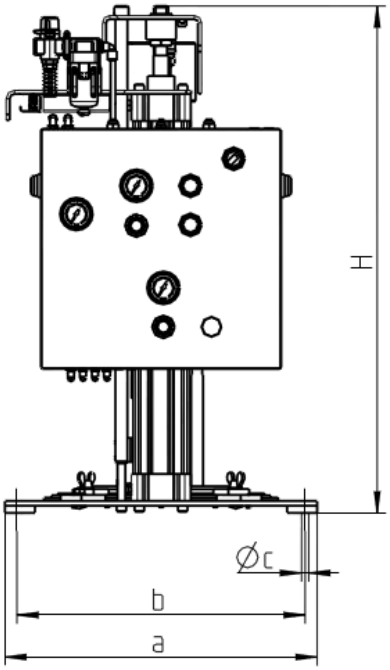

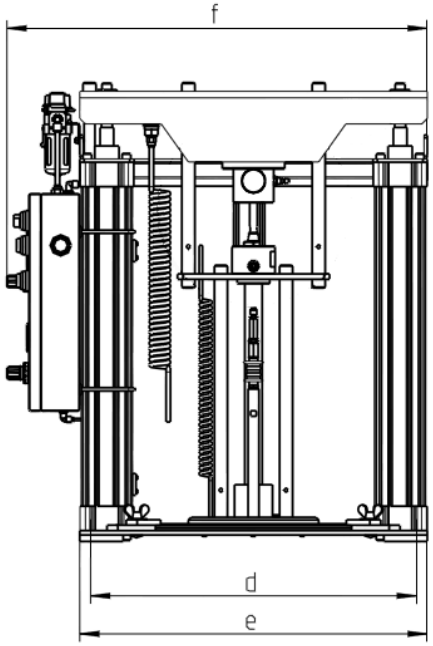

2.4.2 Technical details Typ M

Container	50 kg		180 kg	
Artikel-Number	AXFP3 M20	AXFP3 M40	AXFP4 S25	AXFP4 S60
Pressure ratio	20:1	40:1	20:1	60:1
Output at motor [cm^3/min]	4300	3000	4300	300
Construction type pump	Typ M			
Container high max. [mm]				
Container-internal-Ø min. [mm]				
Container-internal-Ø max. [mm]				
Operating pressure at 6 bar [bar]	105	200		
Max. Pressure [bar]	191	360		
a [mm]	520			
b [mm]	480			
c [mm]	12			
d [mm]	600			
e [mm]	640			
f [mm]	774			
H min. [mm]	1092			
H max. [mm]	1827			

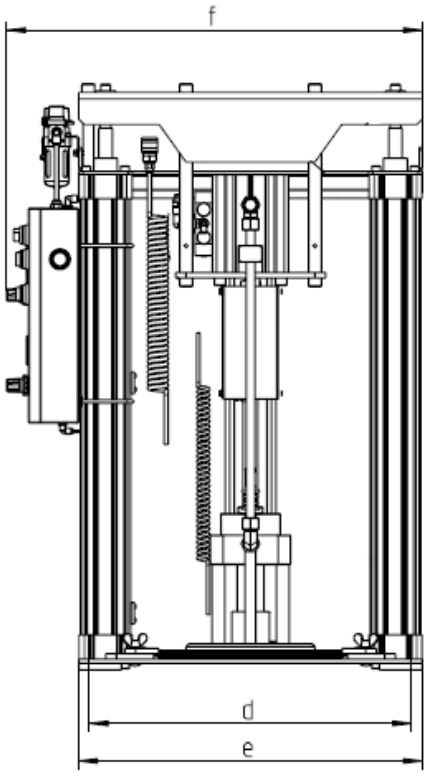

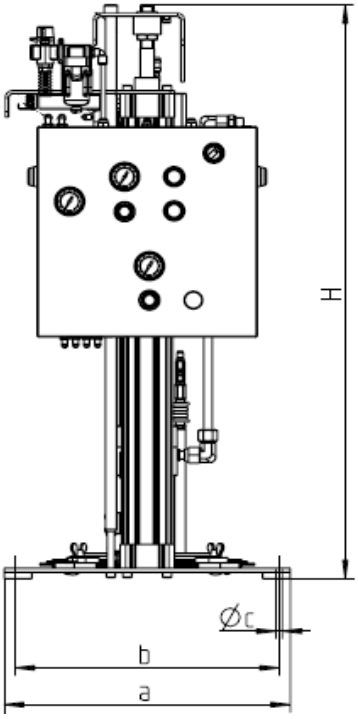

3 Packaging and transport

The plant is prepared by ABNOX AG for the transport to the relevant **initial place of destination**.
The packaging unit must not be subjected to any additional load. The packaging and its content must be protected from any impact of humidity. The transport and storage temperature between –20°C and + 40°C must be observed in any event.

3.1 *Transport damage*

If transport damage is discovered during goods inward inspection, the following procedure must be observed.

- Notify deliverer (freight forwarder, rail, etc.)
- Create damage record
- Inform supplier

3.2 *Interim storage*

The interim storage in aggressive, damp environments or outdoors may result in corrosion damage and other damage, for which we accept no liability. The transport and interim storage temperature of –20 °C to +40°C must be observed by all means.

4 Training

- Only trained and instructed staff that has read and understood all points of the operating instructions, master the individual operating modes as well as now and can implement the associated safety aspects may work on the system/device.
- The duties of the staff are clearly defined for assembling, commissioning, operating, equipping, maintaining, storing and repairing.
- Staff to be trained may only work on the system/device under the supervision of an experienced person.

5 Assembly, setting up / installation

- All legal provisions must be clarified on site and their compliance ensured.
- The ground and space conditions must be clarified before setting up the plant in order to ensure the safe operation for staff and plant permanently. The plant must be set up in such a way that a safe and permanent operation is ensured.
- The plant may be set up, commissioned and/or stored by specially trained expert employees only.
- The plant was built for rooms, which are protected from the influences of weather.
- The operation and storage in aggressive, too damp environments or outdoors can result in corrosion damage, for which we accept no liability.

WARNING

If the plant is delivered with rollers, the plant may be moved with retracted cylinders only. (risk of tilting)

NOTE

The dimensions can be found in the data sheet (sections 2.4.1 – 2.4.3)

6 Interface definition

1) Input (air connection)

The pneumatic barrel supply pump is operated with compressed air. The connection can be found on the left side of the control box in front of the check valve. The safety air coupling of the AX 100 type Item No. 50500.00 (G1/4“) is included in the scope of delivery.

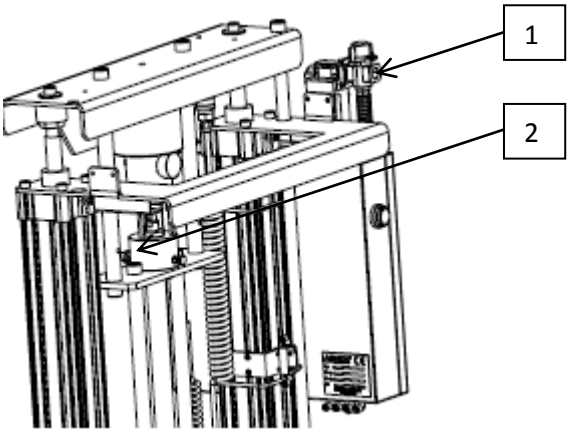

Air coupling connection: nipple ARO 2010 standard
Air coupling: safety air coupling with internal thread G ¼"
Hose nipple: internal ∅ 6 mm
Input pressure: 6 bar (+/- 2 bar)

2) Outlet (medium outlet)
The connection for lubricants can be found at the top of the pump.

Outlet pressure:	in accordance with the pump used
Connection:	in accordance with the pump used

7 Initial commissioning

The plant was fully checked and adjusted before delivery.

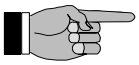

NOTE
Ensure that all screws and hoses are tight (leakproofness).

- Before commissioning, remove the packaging from the plant entirely.
- Put rotary switch in central position.
- Connect the plant using safety air coupling AX 100 with the compressed air network.
- Open check valve.
- Check pneumatic pressure on the pressure gauges.

NOTE
The control pressure of the pneumatic switch is set to 4 bar in the factory. Note: do not change!

Pump pressure is set to 4 bar in the factory.



The cylinder pressure pump lever is set to 0.5 bar in the factory.

To adjust the pneumatic cylinder pressure pump lever, pull the adjustment button and ...

turn right = pressure increase
turn left = pressure reduction

8 Operation

8.1 *Operating elements*

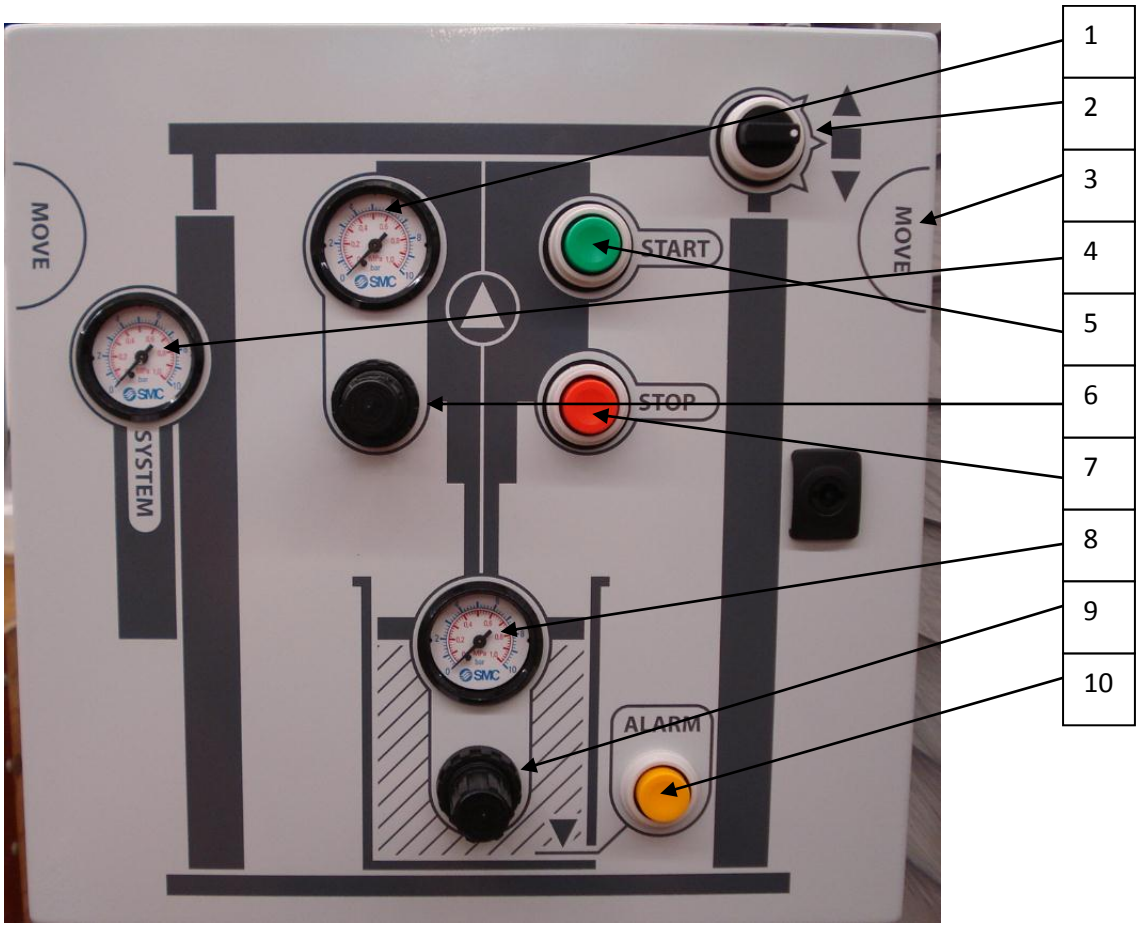

1	Rotary switch lift - hold - lower
2	Pressure gauge pump pressure
3	Manual control for lifting and lowering the cylinders
4	START pump button
5	Pressure gauge system pressure
6	STOP pump button
7	Controller pump pressure (factory settings 4.0 bar)
8	Pressure gauge cylinder pressure pump lever
9	Controller cylinder pressure pump lever (factory settings 0.5 bar)
10	Alarm button off, confirms the alarm tone, only for acoustic container empty message (L) and advance message container change (G) options

8.2 *Insert container*

When placing the container for the first time, the container fastening must be centrally adjusted on the base frame.

- Set rotary switch to LIFT.
- Raise follower piston by operating the two-hand control until the pump lifter has extracted in full (mechanical stop).
- Push the four barrel holders on the base plate outwards to the stop.
- Place the container centrally under the follower piston plate.
- Set rotary switch to LOWER.
- By operating the two-hand control, lower the pump lever until the follower piston plate is just above the container (do not move into the container).
- Again centre the container with the follower piston plate.
- Tighten the two hexagonal nuts (SW 16) on the rear barrel holder with a spanner wrench.
- Tighten all four wing nuts manually.
-

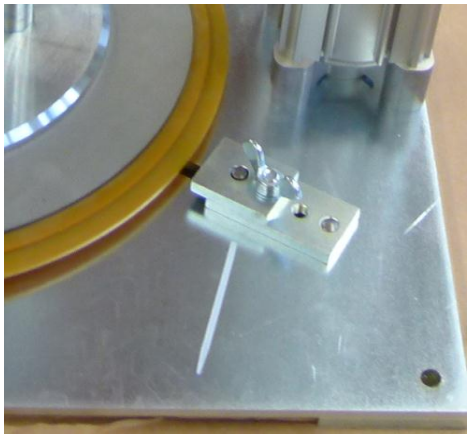

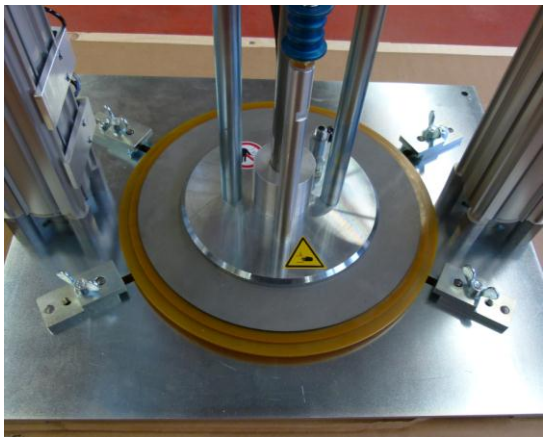

NOTE

- When opening a new container, absolute cleanliness must be ensured. Only clean material may be used. Do not turn lid over the open container.
- Use containers filled by the lubricant manufacturer only. Independently filled or refilled containers often contain air pockets that may result in faults.
- Containers with dents or other deformations must not be used. They result in damage to the follower piston plate and leakage.

8.3 *Retract pump into container*

- Open slide valve on the follower piston plate (upwards movement).
- Set rotary switch to LOWER.
- Lower follower piston plate with the two-hand control until the follower plate has retracted into the container. As soon as the top end switch is operated with the control bar, the follower plate is automatically lowered to the medium level. (see Section 2.4)
- Close slide valve on the follower piston plate (downward movement).

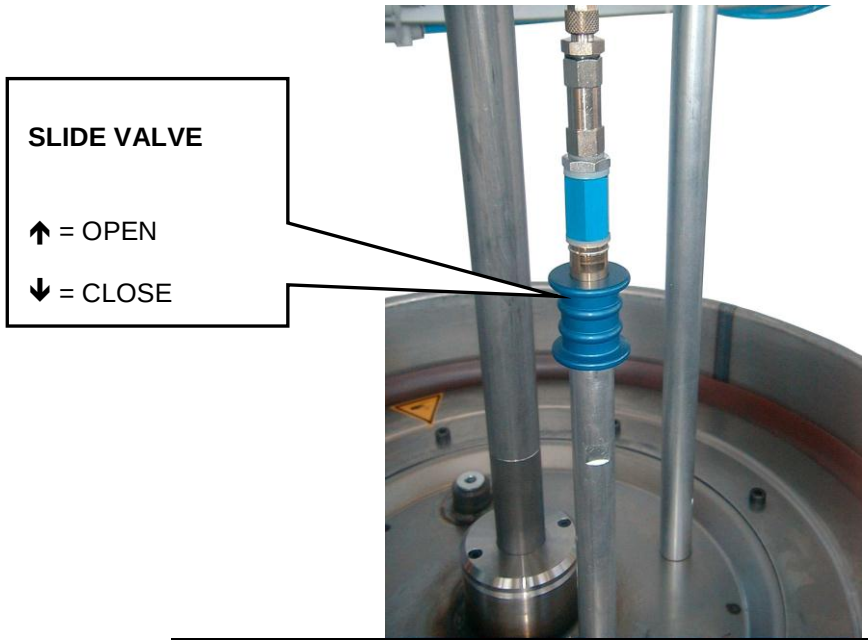

RISK OF HAND INJURY!
When lowering the follower piston plate, do not touch the container edge with the hands or reach into the container under any circumstances.

8.4 *Conveying lubricants*

- Set rotary switch to LOWER.
- Press START button.

8.5 *Extract follower plate from the container*

- Press STOP button.
- Set rotary switch to LIFT until the follower piston plate has extracted from the container.
- NOTE: If the follower piston plate cannot be automatically lifted out of the container entirely, please initiate the following steps:
  1. Open slide valve on the follower piston plate (upwards movement).
  2. Set rotary switch to LIFT.
  3. Raise follower piston by operating the two-hand control until the pump lifter has extracted in full (mechanical stop).
  4. Check and clean sealing of the follower piston plate for damage.

8.6 *Replacing containers*

After extracting the follower plate from the container (Section 8.5):

- Loosen all 4 wing nuts (do not remove)
- Remove empty container
- Push full container centrally until the barrel stop
- Tighten all four wing nuts manually

NOTE

- When opening a new container, absolute cleanliness must be ensured. Only clean material may be used. Do not turn lid over the open container.
- Only the same container size with the same content may be replaced.
- Use containers filled by the lubricant manufacturer only. Independently filled or refilled containers often contain air pockets that result in faults.
- Containers with dents or other deformations must not be used. They result in damage to the follower piston plate or/and leakage.

8.7 *Maintenance unit*

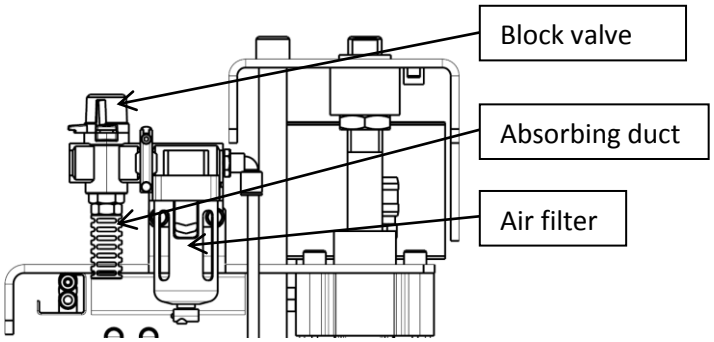

8.7.1 Check valve

- To activate the valve, turn manual operation anti-clockwise 90°.
- If securing via a padlock is chosen, this function can be activated.
- Padlock not included in the scope of delivery.
- To switch off manual operation turn by 90° clockwise.

8.7.2 Air filter

- Do not drive larger than maximum input pressure (type plate data).
- Do not dismantle the filter container under pressure.
- Do not exceed the maximum liquid display on the container. To empty, press the discharge valve manually to discharge the liquid.
- The filter element inserted can by replaced by turning and unscrewing the container (bayonet cap). To this end, clean the container at the same time.

9 Fault search, fault rectification

NOTE
The rectification of all faults specified below may be carried out by a trained expert employee only.

9.1 *Fault – cause – rectification*

Fault	Possible cause	Remedy	Remarks
Pump does not start	Top end switch, automatic mode (X) not operated	Lower pump lever under the position of the end switch with two-hand switching	Section 2.3. 2.4
	No compressed air available	Check compressed air supply	Observe pressure gauge (compressed air)
	Safety coupling not locked in	Lock in safety air coupling	6
	Maintenance unit blocked	Clean or replace filters	Chapter 8.7
	Pump valve defective	Test valve function	Chapter 8.1
	Empty message end switch operated	use full container	Container empty
Pump provides pressure that is too low or no pressure at all	Pressure control valve pump manipulated	Set pressure control valve to higher pressure (adjust as ascending)	Observe pressure gauge (compressed air)
	Pump lifter switched off	Set rotary switch to lower	Chapter 8.1
	Maintenance unit soiled	Clean or replace filters	Chapter 8.7
	Leakage	Check hoses and fittings	
	Too low pressure on the follower piston plate	Slightly increase the pressure on the pressure control valve pump lifter	Section 7
	Air pressure too low	Have compressed air network checked	Notify in-hoist mechanic

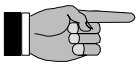

NOTE
Caution when using containers with plastic inserts.
The plastic insert may be sucked in by the pump and block the latter.

10 Customer service/support

ABNOX AG
Langackerstrasse 25
CH-6330 Cham
Switzerland
Tel. +41 (0) 41 780 44 55
Fax +41 (0) 41 780 44 50
E-Mail info@abnox.com
Internet www.abnox.com

11 Maintenance

This section provides information on how the plant needs to be maintained. The overview shows what needs to be services or checked when.

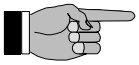

NOTE
This section does not state how the plant is repaired after damage. This work should be carried out by a trained specialist or by the customer services of the manufacturer only

11.1 *Maintenance plan*

The maintenance intervals stated refer to a one-shift operation. If the plant is used in multiple-shift operation or very often, the maintenance intervals are shorter. Additional influences, such as the cleanliness of the working environment or reduced compressed air quality, must also be taken into account.

WHEN	WHAT	HOW	WHO
Weekly	Pneumatic maintenance unit / filter	Remove collecting tray manually and empty water	Specialists of the operator
	Check hoses, fittings for leakproofness	optical	
Monthly	Check damage to the follower plate	optical	Specialists of the operator
	Pneumatic maintenance unit / filter	Clean filter	
Annually	Safety coupling	Check for fit and leakproofness	Specialists of the operator



WARNING
All work on the plant must be carried out in idle mode as a rule. The pneumatic safety coupling must be released and secured against unintended restarting.
The pneumatic and hydraulic system must be pressure free. The pressure gauges must display 0.

12 Decommissioning

12.1 *Short-term interruption*

In the event of a short-term interruption (over night or at the weekend), the plant must be deactivated.
(Checking of the pressure gauges).

12.2 *Long-term interruption*

In the event of a longer non-use, the following points should be observed:

- The main switch must be switched off.

- There must be no pressure in the system (control of the displays).
- Close check valve (pressure release).
- Operate the slide sleeve on the safety air coupling AX 100 (plant is completely disconnected from the pressure network).
- Store the plant and its component in such a way that there is no risk of accident and no damage can occur (e.g. kinking of the hoses).

12.3 *Shutdown of the plant*

When shutting down the plant, the following points should be observed:

- Remove container and clean follower piston plate.
- Loosen the four barrel holders and push outwards to the stop.
- Tighten the four barrel holders in this position manually.
- Set rotary switch to LOWER.
- Lower the follower piston plate with the two-hand control until the pump is automatically lowered until it stops on the base plate.
- Close check valve (pressure release).
- Operate the slide sleeve on the safety air coupling AX 100 and disconnect from the plant entirely.
- There must be no pressure in the system (control of the displays).
- The grease / oil must be removed and disposed of correctly.
- Store the plant and its component in such a way that there is no risk of accident and no damage can occur (e.g. kinking of the hoses).



WARNING
Risks of accidents and environmental hazard: No grease / oil may be spilled.
The grease / oil must be disposed of correctly (hazardous waste).

13 Auxiliary and operating supplies

No special auxiliary and operating supplies are required to operate the system/device.

14 Spare parts

Spare parts drawings, spare parts lists sealing set drawings and sealing set lists can be found in the drawing set at the end of these operating instructions.

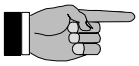

NOTE
Accessories, drawings and spare parts can be found at www.abnox.com

15 Resale

These operating instructions are part of the system/device and are included in the scope of delivery in the event of a resale.

16 Decommissioning and disposal



ENVIRONMENTAL HAZARD
The various materials/liquids must be handled correctly and disposed of in accordance with the relevant national directives.
Lubricants are regarded as hazardous waste.

17 Options



NOTE
Options for this product can be found at www.abnox.com.