Inductive Sensors

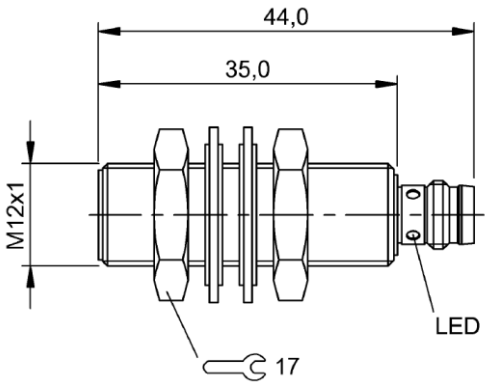

Connector view

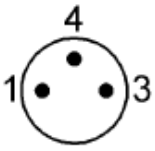

Wiring Diagramm

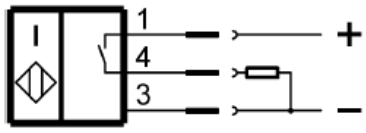

Display/Operation

Function indicator	yes
Power indicator	no

Electrical connection

Connection	M8x1-Male, 3-pole
Protection against device mix-ups	yes
Short-circuit protection	yes

Electrical data

Contamination scale	3
Hysteresis H max. (% of Sr)	15.0 %
Load capacitance max. at Ue	0.5 µF
MTTF (40 °C)	830 a
No-load current Io undamped max.	3 mA
Operating voltage Ub	10…30 VDC
Output resistance Ra	33.0 kOhm + D
Polarity reversal protected	yes
Rated insulation voltage Ui	75 V DC
Rated operating current Ie DC	200 mA
Rated operating voltage Ue DC	24 V
Rated short circuit current	100 A
Ready delay tv max.	20 ms
Repeat accuracy max. (% of Sr)	5.0 %
Residual current Ir max.	10 µA
Ripple max. (% of Ue)	15 %
Switching frequency	2500 Hz
Utilization category	DC-13
Voltage drop static max.	2.5 V

Environmental conditions

Ambient temperature	-25…70 °C
Protection type IEC 60529	IP67

General data

Approval/Conformity	CE cULus EAC
Basic standard	IEC 60947-5-2

Material

Housing material	Brass
Material sensing surface	LCP
Surface protection	nickel-free coated

Mechanical data

Dimension	Ø 12 x 44 mm
Installation	for flush mounting
Size	M12x1
Tightening torque	10 Nm

Output/Interface

Switching output	PNP Normally open (NO)

Range/Distance

Assured operating distance Sa	3.2 mm
Effective operating distance Sr	4 mm
Rated operating distance Sn	4 mm
Switching distance marking	■■
Temperature drift max. (% of Sr)	10 %

ABNOX AG Langackerstrasse 25 CH-6330 Cham
Telefon: +41 41 780 44 55 Telefax: +41 41 780 44 50
E-Mail: info@abnox.com Website: www.abnox.com