ABNOX®
High Pressure Hydraulic & Lubrication

Operating Manual

Metering valve
Metering range 5.0 – 54.0 cm³

Construction type	**41970.00**	**Standard**
	41970.02	**Magnetic ring**
	41970.03	**Initiator**
	41970.04	**Magnetic ring and proximity switch**

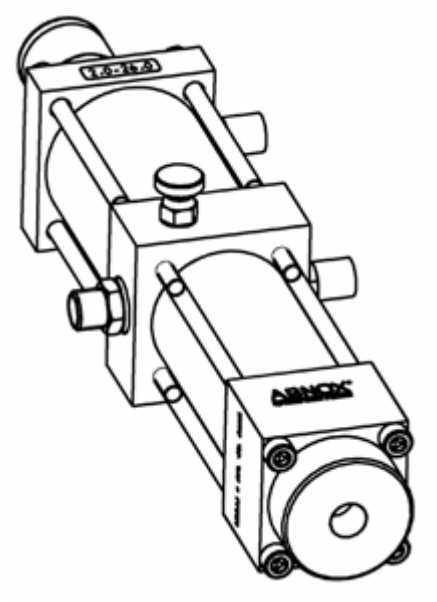

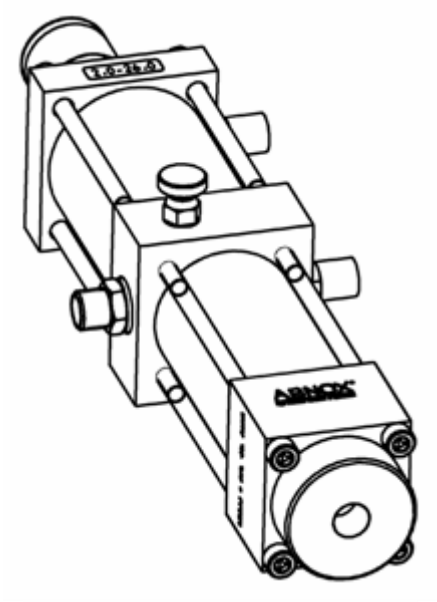

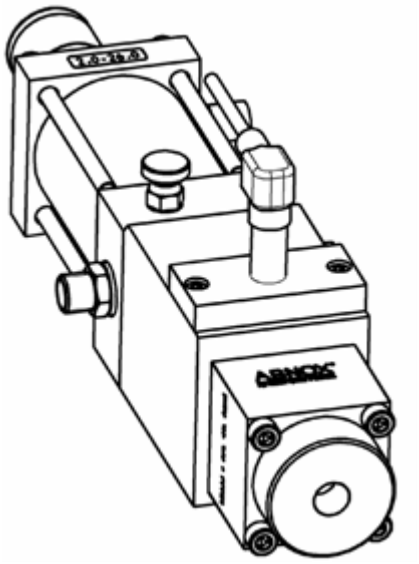

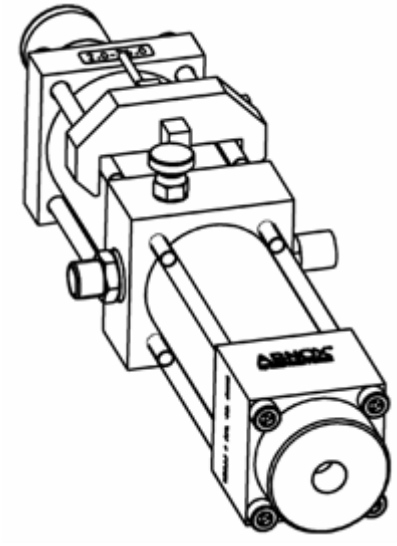

Manufacturer

ABNOX AG
Langackerstrasse 25
CH-6330 Cham
Schweiz

Tel. +41 (0) 41 780 44 55
Fax +41 (0) 41 780 44 50

E-Mail info@abnox.com
Internet www.abnox.com

Declaration

We, the end customer, confirm herewith, that we have read and understood this operating manual, further that we have instructed and tested all employees and any other persons who will operate the products described below.

Company stamp:

Place and date of issue:

Signature:

Declaration of Manufacturer – CE-Marking:

Declaration of manufacturer in compliance to the Machinery Directive 98/37/EC Annex IIA.

Declaration of manufacturer (Statement regarding installation)

The Manufacturer

ABNOX AG
High Pressure Hydraulic & Lubrication
CH – 6330 Cham
Tel. +41 (0) 41 780 44 55
Fax. +41 (0) 41 780 44 50

declare that their products

Metering Valves 1.00 – 6.00 ccm (Name of product)

41970.00, 41970.02, 41970.03, 41970.04 (Type)

-- (Serial number)

must not be put into operation unless it has been confirmed, that the equipment comprising said products fully complies with the Machinery Directive 98/37/EC, including all amendments thereof;

and that said products comply with the following European guidelines:

89/336/EEC
73/23/ECC

further that they comply with the following European standards, national standards or technical regulations:

EN 12100-1
EN 12100-2

Issued in: CH – 6330 Cham
Date: October 20, 2005

Signed by: Roberto Bernich
Inspector for safety and test

Signature:



Contents

1 SAFETY INSTRUCTIONS 7

1.1 SIGNS FOR HAZARD, HINTS AND DIRECTIONS 7
1.2 BASIC SAFETY DIRECTIONS 8
1.3 RESPONSIBILITIES OF OPERATING COMPANY AND STAFF 8
1.4 STAFF TRAINING 8
1.5 HAZARD OF WORKING WITH EQUIPMENT / DEVICE 8
1.6 SAFETY AND PROTECTION OF EQUIPMENT 9
1.7 PERSONAL PROTECTIVE GEAR AND COMPLEMENTARY MEASURES 9
1.8 USAGE OF EQUIPMENT ACCORDING TO INTENDED PURPOSE 9
1.9 INAPPROPRIATE USAGE 9
1.10 SERVICE AND MAINTENANCE, FAULT REPAIR 9
1.11 WARRANTY AND LIABILITY 9

2 DESCRIPTION OF PRODUCT 10

2.1 PURPOSE OF PRODUCT 10
2.2 LABELLING 10
2.3 FUNCTION 10
2.4 OVERVIEW OF CONSTRUCTION TYPES / TECHNICAL DATA 11
2.4.1 41970.00 STANDARD 11
2.4.1.1 41970.00 Technical Data 11
2.4.2 41970.02 MAGNETIC RING 12
2.4.2.1 41970.02 Technical Data 12
2.4.3 41970.03 INITIATOR 13
2.4.3.1 41970.03 Technical Data 13
2.4.4 41970.04 MAGNETIC RING AND PROXIMITY SWITCH 14
2.4.4.1 41970.04 Technical Data 14
2.5 CONNECTION DIAGRAM 15

3 PACKING AND TRANSPORT 15

3.1 PACKING 15
3.2 TRANSPORT DAMAGE 15
3.3 INTERMEDIATE STORAGE 15

4 MOUNTING SITE / INSERTION INTO PLANT 16

5 DEFINITION OF INTERFACES 16

6 INSTALLATION 16

7 COMMISSIONING 16

8 OPERATION 17

8.1 CONTROL ELEMENTS 17

9 TROUBLESHOOTING 17

9.1 FAULT – CAUSE – ACTION 17

10 TAKING OUT OF SERVICE 18

10.1 SHORT INTERRUPTION 18
10.2 LONG-TERM INTERRUPTION 18
10.3 FINAL SHUT-DOWN OF EQUIPMENT 18

11 MAINTENANCE 19

11.1 MAINTENANCE PLAN 19
11.2 CUSTOMER SERVICE / SUPPORT 19

12 OPERATING SUPPLIES 20

13 ACCESSORIES (OPTIONAL) 20

14 DRAWINGS 20

15 SPARE PARTS 20

16 RESALE 20

17 MATERIAL DISPOSAL 20

18 TRAINING 20

19 SHUT-DOWN OF EQUIPMENT 20

20 APPENDIX 21

20.1 DATA SHEETS 21
20.1.1 INDUCTIVE PROXIMITY SWITCH (ART. NO. 42369.01) 21
20.1.2 CONNECTOR TO INDUCTIVE SENSOR (ART. NO. 42369.11) 22
20.1.3 PROXIMITY SWITCH TYPE 102 160 (ART. NO. 42451.01) 23

DRAWING SET 41970.00 24

DIMENSIONED DRAWING M41970.00 24
DRAWING OF SPARE PARTS E41970.00 25
LIST OF SPARE PARTS E41970.00 26

DRAWING SET 41970.02 27

DIMENSIONED DRAWING M41970.02 27
DRAWING OF SPARE PARTS E41970.02 28
LIST OF SPARE PARTS E41970.02 29

DRAWING SET 41970.03 31

DIMENSIONED DRAWING M41970.03 31
DRAWING OF SPARE PARTS E41970.03 32
LIST OF SPARE PARTS E41970.03 33

DRAWING SET 41970.04 35

DIMENSIONED DRAWING M41970.04 35
DRAWING OF SPARE PARTS E41970.04 36
LIST OF SPARE PARTS E41970.04 37

1 Safety Instructions

IMPORTANT
We kindly request that the customer may study this operating manual carefully, in order acquaint himself with the safe and efficient operation of this product. Please keep this manual for future reference.



This operating manual includes important instructions and details for safe and appropriate operation of the equipment. It supports the operating and maintenance staff, thus helping to reduce safety hazard, repair cost and down time, as well as to enhance reliability and service life considerably. It is therefore important at all times that any persons who may be operating or otherwise be in charge of the equipment have access to this document.

1.1 *Signs for hazard, hints and directions*

In this document, all text sections related to safety aspects are marked with a warning sign.



WARNING
Warning indications point out information regarding hazard of injury or property damage, if the product is handled or operated improperly.

In this document, all text sections related to technical requirements are marked with this indication sign.



NOTE
Indication signs point at useful information and hints. Disregarding of these may cause failure, inefficiency or breakdown.

1.2 *Basic Safety Directions*

Basic requirements for safe handling and trouble-free operation of this equipment are the following conditions:



- The equipment must not be used for purposes other than those intended.
- The equipment must not be modified. In case if modifications the customer takes all responsibility. In case of a need for modification to the equipment, please contact ABNOX AG.
- Make sure that the equipment is always in safe operating condition. Qualified staff shall perform functional tests and checks for damage at regular intervals. Authorized staff only shall do disassembly, and according to operation instructions only. To ensure appropriate expertise of the customer's staff, ABNOX AG offers training courses upon request.
- The customer takes responsibility for the compliance to all appropriate safety measures.
- Never operate the equipment if its orifice is pointing towards a person.
- Before begin of maintenance work, always disconnect equipment from air pressure supply and grease feed pipe.
- Check all pipes, hoses and screw connectors for leaks and visible damage at regular intervals. Immediately remove all damage!
- Exposure of the sensors to magnetic fields may cause malfunction of the sensors.
- Ensure and verify by regular checks, that working place, equipment and environment are kept in a clean and clearly arranged state.
- Rules and regulations regarding the prevention of accidents that apply to the working site must be observed.

1.3 *Responsibilities of Operating Company and Staff*

- Reliable and trained staff only should be authorized to work with the equipment, and responsibilities clearly assigned to individuals.
- Maintenance of electrical components of the equipment must be performed by a professional electrician, or under supervision of a professional electrician, and according to electro-technical regulations.
- Maintenance of hydraulic equipment should be assigned to staff with hydraulics know-how and experience only!

1.4 *Staff Training*

- Persons should not work with the equipment unless they have been suitably trained and made familiar with the equipment.
- Responsibilities of personnel for assembly work, commissioning, operation, setting up, maintenance, transport and repair should be clearly assigned to individuals.
- Persons in training may work with the equipment under supervision of an experienced person only.

1.5 *Hazard of Working with Equipment / Device*

All equipment and devices are built to the state of the art and according to accredited safety rules. Nevertheless, safety hazard to the user or third persons, or deficiencies of the plant or its parts may occur if the equipment is not properly used.



The equipment must be used:

- Exclusively for its intended purpose,
- Only if working condition of equipment ensures full technical safety.
- Technical faults, which may degrade safety, must be repaired immediately.

1.6 *Safety and Protection of Equipment*

- Make sure that all protection devices are installed properly and in functional condition, each time before starting the equipment.
- Protection devices must not be removed unless the equipment has been shut down and a safeguard against restart established.

1.7 *Personal Protective Gear and Complementary Measures*

- The user company is responsible for providing the required personal protective gear.
- All safety devices and installations should be tested at regular intervals.

1.8 *Usage of Equipment according to Intended Purpose*

The equipment may be used only under the specified operating conditions. The equipment must be used exclusively for metering of lubrication means according to detailed specification in chapter 2.1 of this operating manual.
Any usage other than or beyond that specified herein is regarded as not according to the intended purpose. The manufacturer company assumes no responsibility for any damage resulting from such improper usage.

Proper usage of equipment according to intended purpose comprises also:

- Observing and adherence to all operating instructions stated in this document.
- Adherence to inspection and maintenance tasks.

1.9 *Inappropriate Usage*

The manufacturer company assumes no responsibility for any damage resulting from such inappropriate usage.

1.10 *Service and Maintenance, Fault Repair*

- The specified calibration and maintenance work should be performed timely according to the maintenance schedule.
- Inform operators prior to execution of calibration and maintenance work.
- Disconnect equipment from mains supply and safeguard against restart (warning sign „Do not switch on“)
- Make sure that all screw connectors and fittings are fastened tightly.
- After completion of maintenance work test all functions and all safety devices.

1.11 *Warranty and Liability*

On principle, the clauses of the agreement in writing of the manufacturer company apply. ABNOX AG exclude all warranty and liability claims in case of damage to persons or material, if they have been caused by, but not limited to, one or more causes stated below:

- Usage of equipment other than that according to the intended purpose
- Work on equipment by persons other than those authorized to work with the equipment
- Improper transport, storage, assembly, commissioning, operation or maintenance of equipment
- Operation of equipment containing faulty safety devices, or safety devices not fitted properly, or safety devices that are out of function
- Neglecting instructions regarding safety, transport, storage, assembly, commissioning, maintenance and setting-up, as stated by the operations manual
- Modification of equipment not authorized by the manufacturer company
- Manipulation of pressure control device, change of supply pressure without authorisation by the manufacturer company
- Insufficient monitoring of equipment parts which are subject to wear
- Repairs executed improperly, use of spare parts from other suppliers
- Catastrophic impacts, e.g. by external matters or force majeure risks.

2 Description of Product

2.1 *Purpose of Product*

Special device designed to apply the right quantity of proper lubricant (grease) to a defined place at the right time.
These metering valves are also suitable for use with oil.

2.2 *Labelling*

The metering valve is identified by an engraving on the side of the housing, showing the manufacturing date and the article number of the product. Furthermore it has a type plate, which contains further information to identify the device.

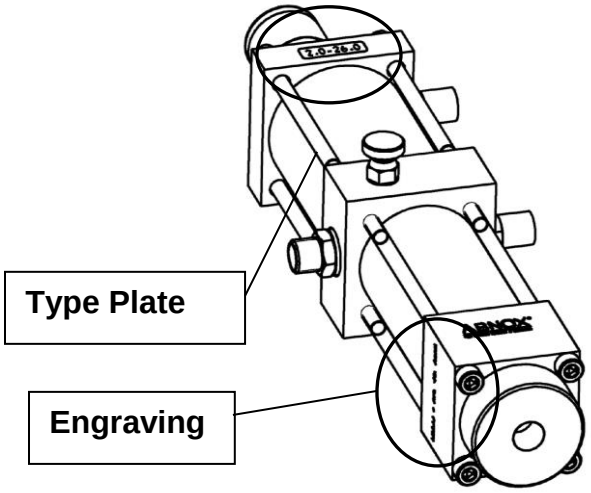

NOTE
Please indicate the product information shown on the engraving and on the type plate when requesting spare parts or technical support.

2.3 *Function*

The pneumatic piston of the metering valve is controlled by an external pneumatic 5/2-way-valve. Moving the piston causes a defined volume of grease to be applied. The output pressure depends on the lubricant feed pressure (media). The pneumatic system is separated from the grease chamber.

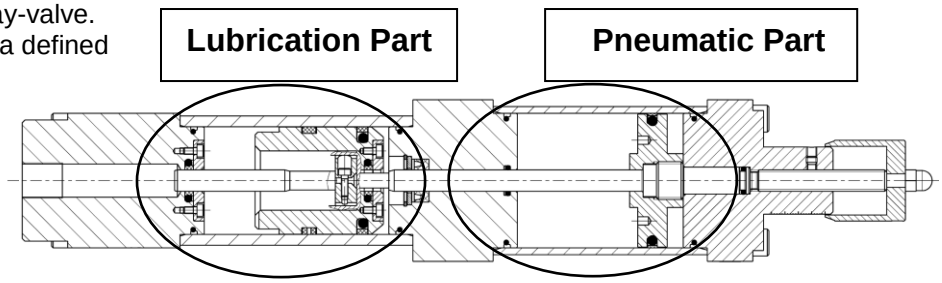

41970.00 Standard Design
41970.02 Air piston fitted with magnetic ring intended for actuation of proximity switch.
41970.03 Initiator to monitor the motion of the metering piston. This function provides additional operating safety. The Initiator produces an electrical impulse upon completion of the greasing cycle, i.e. after the lubricant has been ejected.
In order to ensure reliable functioning of the Initiator, the metering quantity should be set to approximately 10% above the specified minimum quantity of the metering valve. If the dosage quantity is close to the low limit, ABNOX AG recommend to select a smaller size metering valve.
41970.04 Air piston fitted with magnetic ring and proximity switch incorporated in the metering valve. This additional function enhances operating safety. The Initiator produces an electrical impulse upon completion of the greasing cycle, i.e. after the piston has reached its home position.

2.4 *Overview of Construction Types / Technical Data*

2.4.1 41970.00 Standard

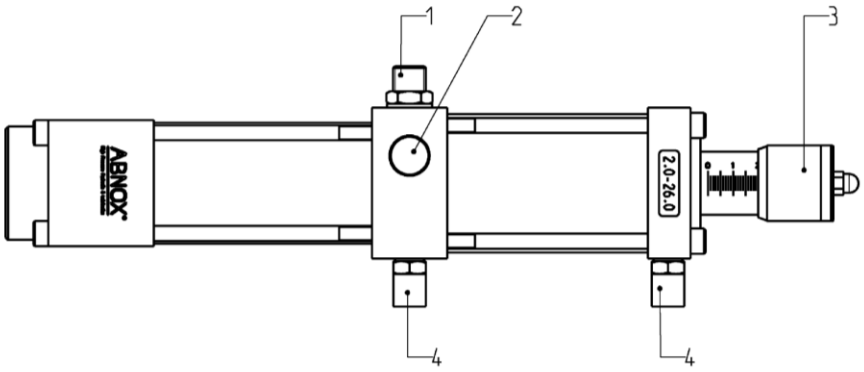

LEGEND	
Pos.	**Description**
1	Grease supply
2	Air vent
3	Adjustment screw
4	Air connection
5	--
6	--
7	--

2.4.1.1 41970.00 Technical Data

Schutzvermerk nach ISO 16016 / Protection notices ISO 16016

Modell Model	Station Station
Bauform Construction type	Standard Standard
Ausfuehrung [cm³] Version [cm³]	5.0 - 54.0
Gewicht [kg] Weight [kg]	2.56
Anschluss Innengewinde P Connection internal thread P	G 1/4" 1/4" BSP
Anschluss Innengewinde A Connection internal thread A	G 1/4" 1/4" BSP
Anschluss Innengewinde 2 + 4 Connection internal thread 2 + 4	G 1/8" 1/8" BSP
Befestigungsgewinde Fastening thread	M6
Max. Druck [bar] Max. pressure [bar]	200
Druck OUT [bar] Pressure OUT [bar]	80
Min. pneum. Betriebsdruck [bar] Min. operating air pressure [bar]	5.0
Max. pneum. Betriebsdruck [bar] Max. operating air pressure [bar]	7.0
Optimaler pneum. Betriebsdruck [bar] Optimum operating air pressure [bar]	6.0
Dosierbereich [cm³] Dispensing range [cm³]	5.0 - 54.0
Einsatzmediumspezifikation Specification for operation medium	Schmierstoffe Lubricants

Hauptabmessung : 60x60x463 mm — ERP ID Nr.: 0

Massstab: 1:1

	Datum	Visum
Gez.	08.11.04	ST
Gepr.	.	.
Freigabe	.	.

Benennung: Dosierventil / Metering valve

ABNOX
Langackerstrasse 25
CH-6330 Cham
www.abnox.com

Zeichnungsnummer: M41970-00 — Blatt Nr.: 2 — Anzahl Bl.: 2

Modell: 41970-00.ASSEM — Z.-Format: A4

Ursp.: - — Ers. f.: -

Zust. | Aenderung | Datum | Visum

3D-modelliert (Pro/ENGINEER)

2.4.2 41970.02 Magnetic ring

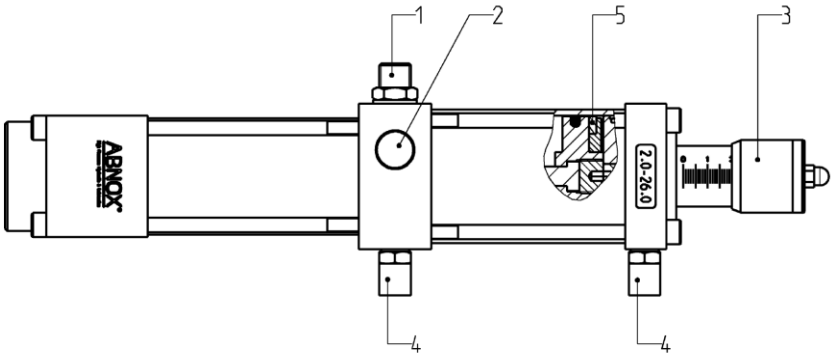

LEGEND	
Pos.	**Description**
1	Grease supply
2	Air vent
3	Adjustment screw
4	Air connection
5	Magnetic ring
6	--
7	--

2.4.2.1 41970.02 Technical Data

Schutzvermerk nach ISO 16016 / Protection notices ISO 16016

Modell Model	Station Station
Bauform Construction type	Magnetband Magnetic ring
Ausfuehrung [cm³] Version [cm³]	5.0 - 54.0
Gewicht [kg] Weight [kg]	2.59
Anschluss Innengewinde P Connection internal thread P	G 1/4" 1/4" BSP
Anschluss Innengewinde A Connection internal thread A	G 1/4" 1/4" BSP
Anschluss Innengewinde 2 + 4 Connection internal thread 2 + 4	G 1/8" 1/8" BSP
Befestigungsgewinde Fastening thread	M6
Max. Druck [bar] Max. pressure [bar]	200
Druck OUT [bar] Pressure OUT [bar]	80
Min. pneum. Betriebsdruck [bar] Min. operating air pressure [bar]	5.0
Max. pneum. Betriebsdruck [bar] Max. operating air pressure [bar]	7.0
Optimaler pneum. Betriebsdruck [bar] Optimum operating air pressure [bar]	6.0
Dosierbereich [cm³] Dispensing range [cm³]	5.0 - 54.0
Einsatzmediumspezifikation Specification for operation medium	Schmierstoffe Lubricants

Hauptabmessung : 60x60x463 mm — ERP ID Nr.: 0

Massstab: 1:1

	Datum	Visum
Gez.	08.11.04	ST
Gepr.	.	.
Freigabe	.	.

Benennung: Dosierventil / Metering valve

ABNOX
Langackerstrasse 25
CH-6330 Cham
www.abnox.com

Zeichnungsnummer: M41970-02 — Blatt Nr.: 2 — Anzahl Bl.: 2

Modell: 41970-02.ASSEM — Z.-Format: A4

Ursp.: - — Ers. f.: -

Zust. | Aenderung | Datum | Visum

3D-modelliert (Pro/ENGINEER)

2.4.3 41970.03 Initiator

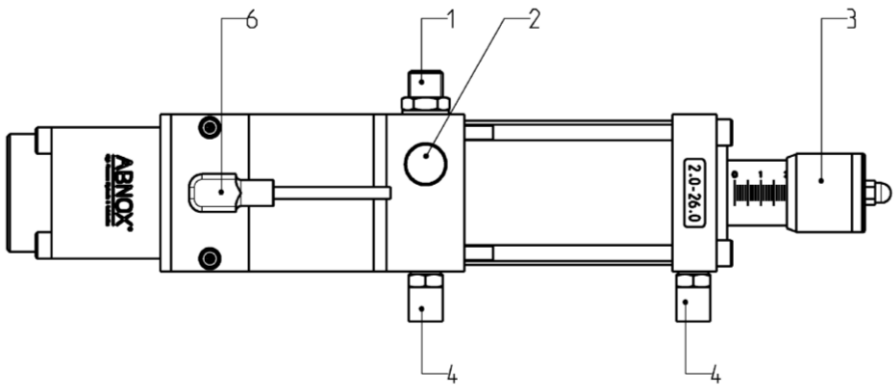

LEGEND	
Pos.	**Description**
1	Grease supply
2	Air vent
3	Adjustment screw
4	Air connection
5	--
6	Initiator
7	--

2.4.3.1 41970.03 Technical Data

Schutzvermerk nach ISO 16016 / Protection notices ISO 16016

Modell Model	Station Station
Bauform Construction type	Standard Standard
Ausfuehrung [cm³] Version [cm³]	5.0 - 54.0
Gewicht [kg] Weight [kg]	2.86
Anschluss Innengewinde P Connection internal thread P	G 1/4" 1/4" BSP
Anschluss Innengewinde A Connection internal thread A	G 1/4" 1/4" BSP
Anschluss Innengewinde 2 + 4 Connection internal thread 2 + 4	G 1/8" 1/8" BSP
Befestigungsgewinde Fastening thread	M6
Max. Druck [bar] Max. pressure [bar]	200
Druck OUT [bar] Pressure OUT [bar]	80
Min. pneum. Betriebsdruck [bar] Min. operating air pressure [bar]	5.0
Max. pneum. Betriebsdruck [bar] Max. operating air pressure [bar]	7.0
Optimaler pneum. Betriebsdruck [bar] Optimum operating air pressure [bar]	6.0
Dosierbereich [cm³] Dispensing range [cm³]	5.0 - 54.0
Einsatzmediumspezifikation Specification for operation medium	Schmierstoffe Lubricants
Betriebsspannungsbereich [VDC] operating voltage range [VDC]	10 - 30
Stromaufnahme [A] current input [A]	< 0.008
Max. Laststrom [A] load current [A]	0.2
Schutzart Protective	IP 68/67
Anzeige Indicator	LED

Hauptabmessung : 60x60x463 mm — ERP ID Nr.: 0

Massstab: 1:1

	Datum	Visum
Gez.	08.11.04	ST
Gepr.	.	.
Freigabe	.	.

Benennung: Dosierventil / Metering valve

ABNOX
Langackerstrasse 25
CH-6330 Cham
www.abnox.com

Zeichnungsnummer: M41970-03 — Blatt Nr.: 2 — Anzahl Bl.: 2

Modell: 41970-03.ASSEM — Z.-Format: A4 — Ursp.: - — Ers. f.: -

Zust. Aenderung | Datum | Visum

3D-modelliert (Pro/ENGINEER)

2.4.4 41970.04 Magnetic Ring and Proximity Switch

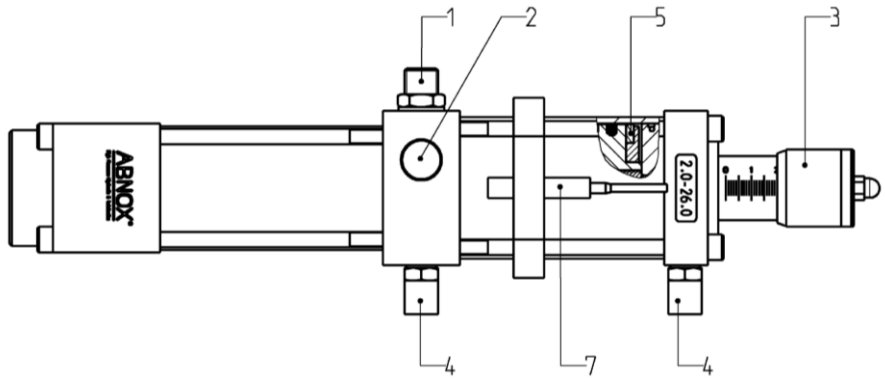

LEGEND	
Pos.	**Description**
1	Grease supply
2	Air vent
3	Adjustment screw
4	Air connection
5	Magnetic ring
6	--
7	Proximity switch

2.4.4.1 41970.04 Technical Data

Schutzvermerk nach ISO 16016 / Protection notices ISO 16016

Modell Model	Station Station
Bauform Construction type	Naeherungsschalter Proximity switch
Ausfuehrung [cm³] Version [cm³]	5.0 - 54.0
Gewicht [kg] Weight [kg]	2.64
Anschluss Innengewinde P Connection internal thread P	G 1/4" 1/4" BSP
Anschluss Innengewinde A Connection internal thread A	G 1/4" 1/4" BSP
Anschluss Innengewinde 2 + 4 Connection internal thread 2 + 4	G 1/8" 1/8" BSP
Befestigungsgewinde Fastening thread	M6
Max. Druck [bar] Max. pressure [bar]	200
Druck OUT [bar] Pressure OUT [bar]	80
Min. pneum. Betriebsdruck [bar] Min. operating air pressure [bar]	5.0
Max. pneum. Betriebsdruck [bar] Max. operating air pressure [bar]	7.0
Optimaler pneum. Betriebsdruck [bar] Optimum operating air pressure [bar]	6.0
Dosierbereich [cm³] Dispensing range [cm³]	5.0 - 54.0
Einsatzmediumspezifikation Specification for operation medium	Schmierstoffe Lubricants
Max. Schaltspannung [V] Max. switching voltage [V]	12 - 24
Max. Schaltstrom [A] Max. switching current [A]	0.5
Max. Schaltleistung [W / VA] Max. switching power [W / VA]	10 / 12
Schutzart DIN 40050 Protective system DIN 40050	IP 67
Anzeige Indicator	LED

Hauptabmessung : 60x60x463 mm — ERP ID Nr.: 0

Massstab: 1:1

	Datum	Visum
Gez.	08.11.04	ST
Gepr.	.	.
Freigabe	.	.

Benennung: Dosierventil / Metering valve

ABNOX®
Langackerstrasse 25
CH-6330 Cham
www.abnox.com

Zeichnungsnummer: M41970-04 — Blatt Nr.: 2 — Anzahl Bl.: 2

Modell: 41970-04.ASSEM — Z.-Format: A4

Ursp.: - — Ers. f.: -

Zust. | Aenderung | Datum | Visum

3D-modelliert (Pro/ENGINEER)

2.5 *Connection Diagram*

NOTE
ABNOX AG recommend the use of a maintenance unit to ensure clean air supply.

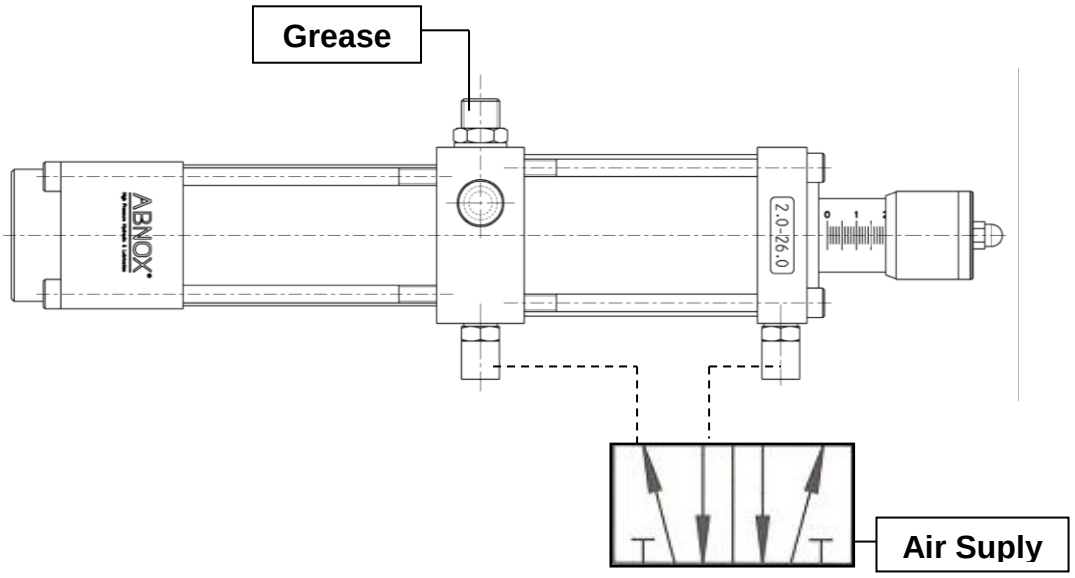

3 Packing and Transport

3.1 *Packing*

Preparation and packing of equipment is provided by ABNOX AG and is designed for transportation to the “first destination”.
The packaging must not be exposed to additional strain. The packaging and its contents should be protected from humidity. Ambient temperature during transport and storage must be maintained within –20 °C to +40°C.

3.2 *Transport Damage*

Should damage due to transportation be discovered by the incoming goods inspection, the following procedure should be observed:

- Inform transport company (Carrier company, railways etc.)
- Write damage report
- Inform supplier company

3.3 *Intermediate Storage*

Storage in an aggressive or moist environment or outdoors may lead to corrosion or other damage. ABNOX AG will not assume liability for such damage. Temperature must be kept within –20 °C to +40°C during transport and intermediate storage.

4 Mounting Site / Insertion into Plant

- All legal requirements for the mounting site should be identified and verified on site whether they are fulfilled.
- Prior to installation of the equipment, or insertion into the plant respectively, the condition of the floor and the size of the surrounding space should be checked, to ensure safety of operation for both personnel and equipment. The installation or insertion into the plant respectively, shall be such, that continuous operation at a high safety level is ensured.
- The installation of the equipment, as well as commissioning of the equipment, or storage, shall be conducted by specialists trained and made familiar with the equipment only.
- The equipment is not designed for use in areas with exposure to weather influence.
- Operation or storage of the equipment in an aggressive or moist environment or outdoors may lead to corrosion or other damage. ABNOX AG will not assume liability for such damage.

5 Definition of Interfaces

See drawing set, dimensioned drawings at rear of operating manual: Connectors for air and grease supply.

6 Installation

The equipment shall be installed at the intended operating site, under consideration of the conditions specified in chapter 4.

7 Commissioning



NOTE
In order to ensure optimal operation of valves, make sure that the air supply pressure is set to approx. 6 bar.
The lubricant feed pressure should not exceed 200 bar at the input. To ensure this, check the pressure conversion ratio of the lubricant feed pump. The feed pressure may be reduced by means of an air pressure control valve (The use of an air pressure control valve may be advantageous, although it is not imperative).



NOTE
All metering valves are tested by the manufacturer prior to shipping. Due to testing, residues of test liquid may be found inside the valve.

1) Make sure that the lubricant feed hose is filled with lubricant and all air removed. Then connect feed hose and air connectors according to drawing.
2) For first operation, set valve to maximum dosage (i.e. turn adjustment screw to outmost position).
3) If the adjustment screw cannot be turned, change position of change-over-valve. The adjustment screw should now be unlocked.
4) Execute a first shot of lubricant. Then set the adjustment screw to the desired grease quantity.
5) Keep the distance from the metering valve to the greasing point short. This allows for improved metering precision and repeatability.
6) The minimum cycle time depends upon the viscosity of the lubricant, as well as the lubricant feed pressure.
7) The metering valves and their support brackets are mounted by 2 screws size M6.

8 Operation

8.1 *Control Elements*

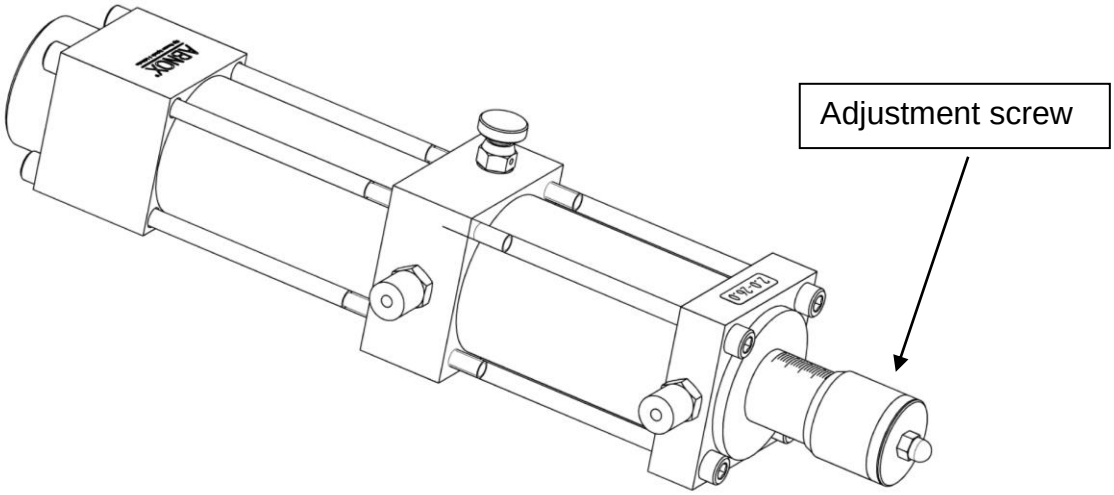

9 Troubleshooting

NOTE
Troubleshooting should be performed by a trained specialist only.

9.1 *Fault – Cause – Action*

NOTE
No special tools are required for the actions stated below.

Fault	Possible cause	Action
Valve is actuated, but no lubricant is ejected	No lubricant may be transported by feed pump	Check feed pump. See operating manual of feed pump
		Check venting screw of feed pump (See operating manual of feed pump)
	Leak	Check metering valve
Signal of Initiator is continuously set to „on“	Faulty Initiator	Replace Initiator
	Metering piston does not reach end position.	Check metering valve, check setting of metering adjustment screw
No output signal from Initiator	Broken cable	Replace cable
	Faulty Initiator	Replace Initiator
	Electrical connection loose, disconnected	Check electrical connections
	Bracket loose	Tighten bracket
	Initiator loose in bracket	Tighten Initiator to bracket
Signal of proximity switch is continuously set to „on“	Air piston is always at its home position.	Check metering valve.
	Faulty proximity switch.	Replace proximity switch

No signal from proximity switch:	Air piston does not reach its home position, or damaged piston.	Check metering valve.
LED of Initiator does not work.	Faulty LED	Replace Initiator
Air pockets in grease system	Air pockets in grease container Air pockets in tubing	Disconnect tubing to metering valve. Drain a quantum of grease. Restart with dosage adjustment screw set to maximum.

10 Taking out of Service

10.1 *Short Interruption*

For short interruptions (over night or during weekends), switch off main switch. Pressure inside equipment is removed and electrical power off (check signalling and dials).

10.2 *Long-term Interruption*

Please observe procedure stated below when taking equipment out of service for longer periods:

- Switch off main switch.
- Disconnect mains plug.
- Pressure inside equipment must be removed (check signalling and dials).

10.3 *Final Shut-down of Equipment*

For shut-down of equipment, please follow this procedure:

- Switch off main switch.
- Disconnect mains plug.
- Pressure inside equipment must be removed (check signalling and dials).
- Drain grease or oil and take care of proper disposal.



WARNING
Danger of accidents und environmental hazard: Do not spill grease or oil.
Take care of proper disposal of grease and oil (hazardous waste).

11 Maintenance

This chapter explains how to perform maintenance of the equipment. The maintenance table shows what should be checked and at which intervals.



NOTE
This chapter does not explain how to repair damage of the equipment. Damage repair shall be executed exclusively by skilled and trained experts, or by staff of the manufacturer's customer service.

11.1 *Maintenance Plan*



WARNING
As a rule, all work must be executed with the equipment shut down only. The main switch must be switched of and the mains plug disconnected from electrical supply. Pressure inside the pneumatic and the hydraulic systems must be removed.

The maintenance intervals stated below are valid for single shift operation of the equipment. In case of multiple-shift or very intensive operation, maintenance intervals are shortened accordingly. Also take into account other influences on maintenance need, such as dirty environment.

WHEN	WHAT	HOW	WHO
Weekly	Check metering valve for leak proofness	Visual inspection	User company expert
Monthly	Check electrical cabling for damage	Visual inspection	User company expert

11.2 *Customer Service / Support*

ABNOX AG
Langackerstrasse 25
CH-6330 Cham
Schweiz

Tel. +41 (0) 41 780 44 55
Fax +41 (0) 41 780 44 50

E-Mail info@abnox.com
Internet www.abnox.com

12 Operating Supplies

No special operating supplies are required for the equipment.

13 Accessories (Optional)

- Flow indicators (electrical, mechanical)
- Pressure control valves for air supply
- 5/2-way valve
- Foot operated valve

14 Drawings

Dimensioned drawings, drawings and lists of spare parts are contained in the part „Drawing Set“ at the rear of this operating manual.

15 Spare Parts

Drawings and lists of spare parts and of seal parts are contained in the part „Drawing Set“ at the rear of this operating manual.

16 Resale

This operating manual is part of the equipment and hence to be included in the delivery scope when reselling.

17 Material Disposal



WARNING
Lubricant material must be treated as hazardous waste.

18 Training

- Persons trained and made familiar with the equipment exclusively shall conduct work on the equipment. It is indispensable that this person has read and understood the operating manual, and is capable to control the equipment in all operating states, and that the person knows how to handle all safety hazards.
- Responsibilities of personnel for assembly work, commissioning, operation, setting up, maintenance, transport and repair should be clearly assigned to individuals.
- Persons in training may work with the equipment under supervision of an experienced person only.

19 Shut-down of equipment



WARNING
Materials and liquids shall be individually handled and disposed of in a professional manner and in compliance with the applying national legal regulations.

20 Appendix

20.1 *Data Sheets*

20.1.1 Inductive Proximity Switch (Art. No. 42369.01)

Inductive sensors special versions

dimension drawing

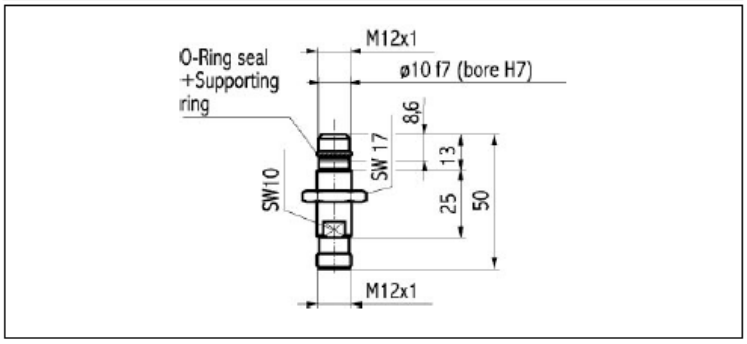

general data	
mounting type	shielded
special type	high pressure
nominal sensing distance Sn	2 mm
hysteresis	3 ... 20 % of Sr

electrical data	
switching frequency	< 2 kHz
voltage supply range +Vs	10 ... 30 VDC
current consumption max.	8 mA
output function	NO
output circuit	PNP
voltage drop Vd	< 2 VDC
output current	< 200 mA
short circuit protection	yes
reverse polarity protection	yes

mechanical data	
type	cylindrical threaded
material (sensing face)	ceramic
housing material	stainless steel
pressure static	< 500 bar
pressure dynamic	< 350 bar
dimension	12 mm
housing length	50 mm
connection types	connector

ambient conditions	
operating temperature	-25 ... +80 °C
protection class	IP 68/67 (sensing face/sensor)

photo



connection diagram

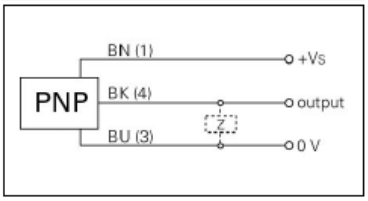

20.1.2 Connector to Inductive Sensor (Art. No. 42369.11)

Length of cable 5m

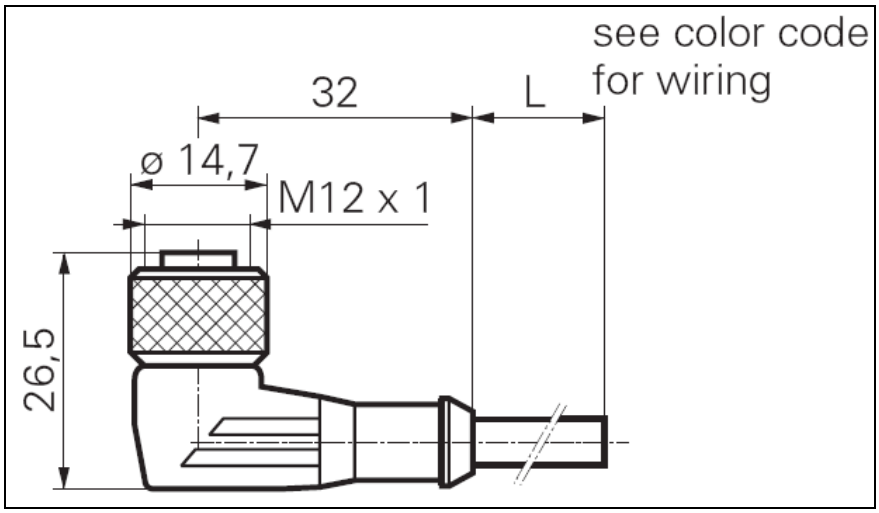

20.1.3 Proximity Switch Type 102 160 (Art. No. 42451.01)

Pneumatic Cylinder Switch
Type 102 160

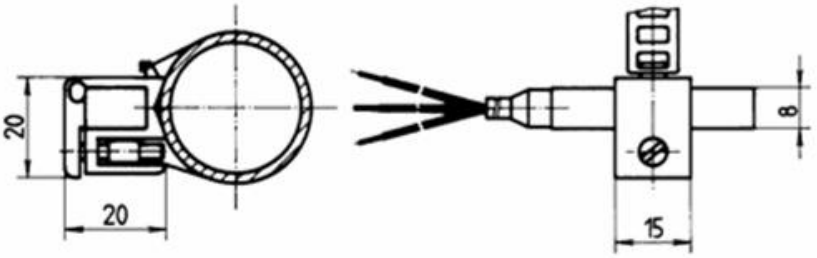

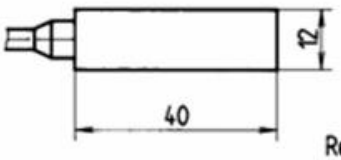

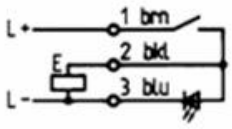

Remark:
Increased magnetic sensitivity
for small magnetic fields

TECHNICAL SPECIFICATION:	
Switching voltage:	12 ... 24 V
Switching current:	0,5 A
Switching power:	10 W / 12 VA
Contact form:	N / O
Protection class:	IP 67 (DIN 40 050)
Temperature range:	-25°C ... +75°C
Indicator:	LED
Housing:	PI opaque black
Standard straps with alu - clamps:	Ø 12 - 30 mm order No. 351060
	Ø 30 - 70 mm order No. 351061
Clamp - sets:	Tie - rod Ø 5 - 8 mm order No. 351064
	Tie - rod Ø 8 -12 mm order No. 351067
Other lengths available on request.	

We reserve the right to change specifications without notice.

01/95

Drawing Set 41970.00

Dimensioned Drawing M41970.00

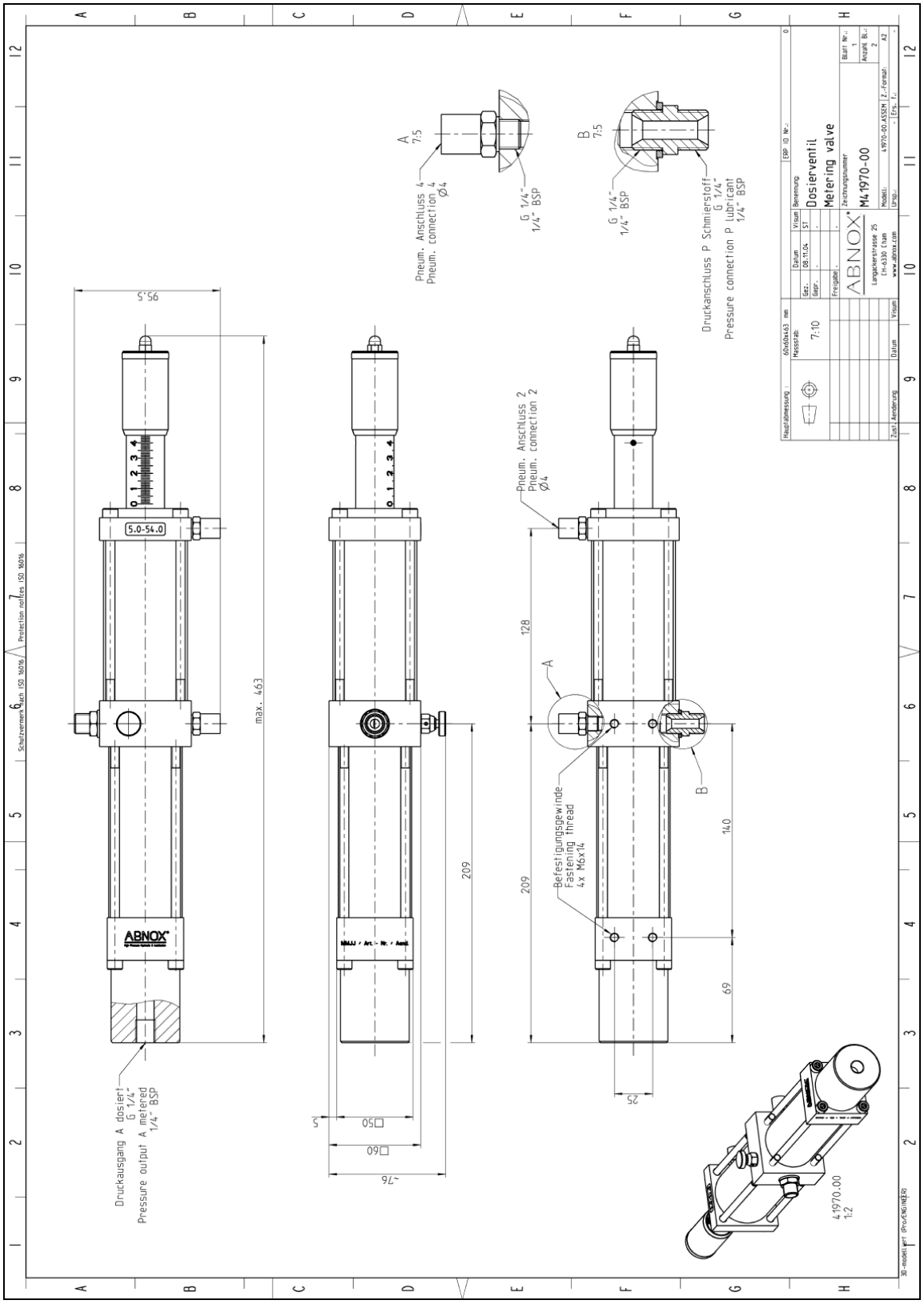

Drawing of Spare Parts E41970.00

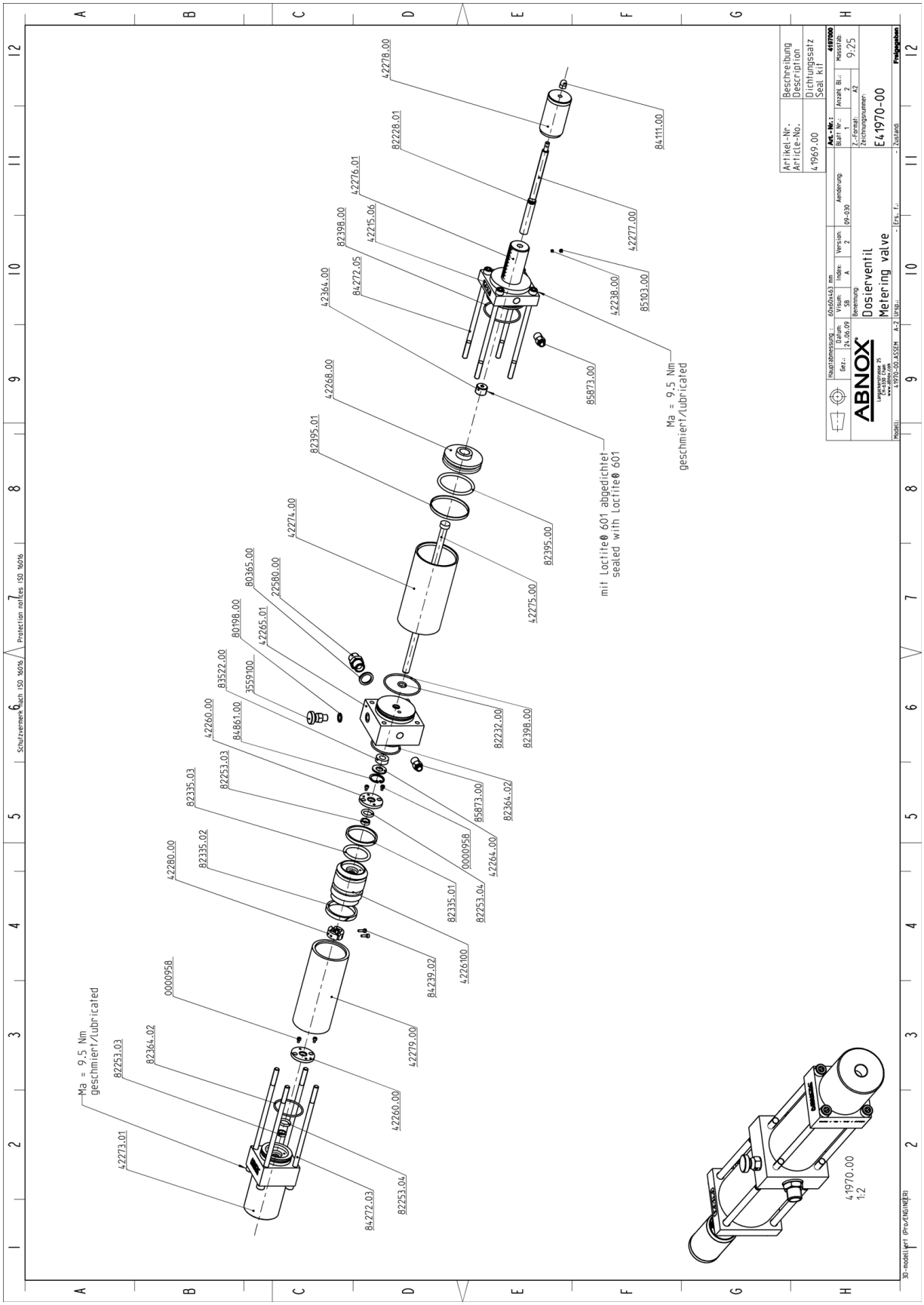

List of Spare Parts E41970.00

Art-Nr./Art-No.	Bezeichnung	Description	Menge/pieces
0000958	Zylinderschraube	Hexagon screw	4
0004850	Gewindestück	Connecting piece	1
35591.00	Entlüftungsventil	Air release valve	1
41969.00	Dichtungssatz	Seal kit	1
42215.06	Schild 5.00-54.00	Sign 5.00-54.00	1
42238.00	Gummistück	Rubber stopper	1
42260.00	Dichtscheibe	Sealing disc	2
42261.00	Dosierkolben	Metering piston	1
42264.00	Scheibe	Disc	1
42265.01	Mittelstück	Centerpiece	1
42268.00	Steuerkolben	Control piston	1
42273.01	Anschlussstück	Connecting piece	1
42274.00	Zylinder	Cylinder	1
42275.00	Ventilstange	Valve rod	1
42276.01	Endstück	End section	1
42277.00	Dosierschraube	Metering screw	1
42278.00	Regulierhülse	Metering sleeve	1
42279.00	Druckzylinder	Hydraulic cylinder	1
42280.00	Stellring Paar	Set collar	1
42364.00	Gewindestift	Set screw	1
80198.00	Dichtung	Seal	1
80365.00	Dichtung	Seal	1
82228.01	O-Ring	O-ring	1
82232.00	O-Ring	O-ring	1
82253.03	Glydring	Glydring	2
82253.04	O-Ring	O-ring	2
82335.01	Glydring	Glydring	1
82335.02	Slydring	Slydring	1
82335.03	O-Ring	O-ring	1
82364.02	O-Ring	O-ring	2
82395.00	O-Ring	O-ring	1
82395.01	Glydring	Glydring	1
82398.00	O-Ring	O-ring	2
83522.00	Nutring	Slotring	1
84111.00	Hutmutter	Cap nut	1
84239.02	Zylinderschraube	Hexagon screw	2
84272.03	Zylinderschraube	Hexagon screw	4
84272.05	Zylinderschraube	Hexagon screw	4
84861.00	Sicherungsring	Retaining ring	2
85081.00	Gewindestift	Set screw	2
85103.00	Gewindestift	Set screw	2
85873.00	Schnellverschraubung	Fitting	4

Drawing Set 41970.02

Dimensioned Drawing M41970.02

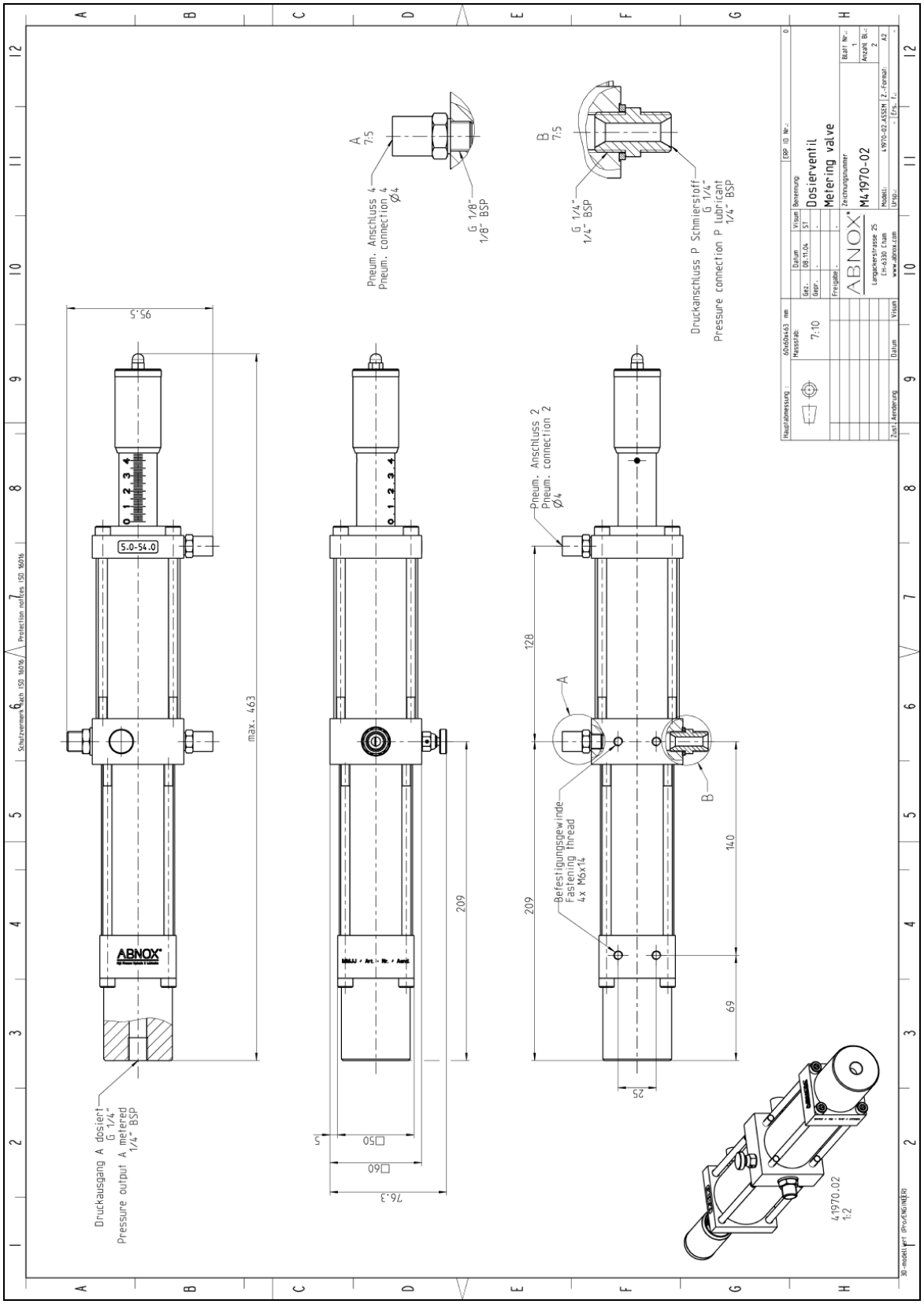

Drawing of Spare Parts E41970.02

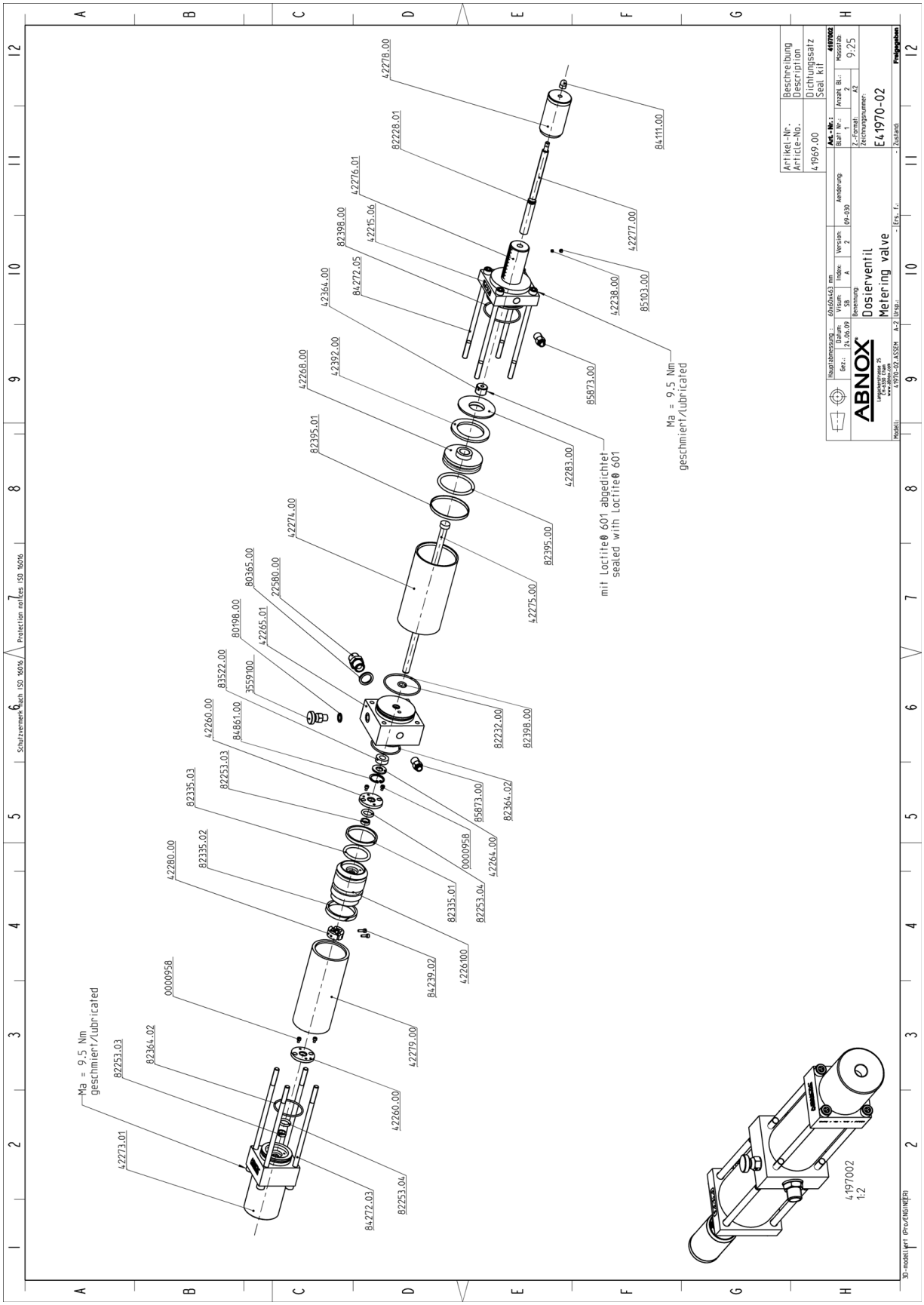

ABNOX®
High Pressure Hydraulic & Lubrication

List of Spare Parts E41970.02

Art-Nr./Art-No.	Bezeichnung	Description	Menge/pieces
0000958	Zylinderschraube	Hexagon screw	4
22580.00	Gewindestück	Connecting piece	1
35591.00	Entlüftungsventil	Air release valve	1
41969.00	Dichtungssatz	Seal kit	1
42215.06	Schild 5.00-54.00	Sign 5.00-54.00	1
42238.00	Gummistück	Rubber stopper	1
42260.00	Dichtscheibe	Sealing disc	2
42261.00	Dosierkolben	Metering piston	1
42264.00	Scheibe	Disc	1
42265.01	Mittelstück	Centerpiece	1
42268.00	Steuerkolben	Control piston	1
42273.01	Anschlussstück	Connecting piece	1
42274.00	Zylinder	Cylinder	1
42275.00	Ventilstange	Valve rod	1
42276.01	Endstück	End section	1
42277.00	Dosierschraube	Metering screw	1
42278.00	Regulierhülse	Metering sleeve	1
42279.00	Druckzylinder	Hydraulic cylinder	1
42280.00	Stellring Paar	Set collar	1
42283.00	Ring	Ring	1
42364.00	Gewindestift	Set screw	1
42392.00	Plastikmagnet	Magnetic ring	1
80198.00	Dichtung	Seal	1
80365.00	Dichtung	Seal	1
82228.01	O-Ring	O-ring	1
82232.00	O-Ring	O-ring	1
82253.03	Glydring	Glydring	2
82253.04	O-Ring	O-ring	2
82335.01	Glydring	Glydring	1
82335.02	Slydring	Slydring	1
82335.03	O-Ring	O-ring	1
82364.02	O-Ring	O-ring	2
82395.00	O-Ring	O-ring	1
82395.01	Glydring	Glydring	1
82398.00	O-Ring	O-ring	2
83522.00	Nutring	Slotring	1
84111.00	Hutmutter	Cap nut	1
84239.02	Zylinderschraube	Hexagon screw	2
84272.03	Zylinderschraube	Hexagon screw	4
84272.05	Zylinderschraube	Hexagon screw	4
84861.00	Sicherungsring	Retaining ring	1

85103.00	Gewindestift	Set screw	1
85873.00	Schnellverschraubung	Fitting	2

Drawing Set 41970.03

Dimensioned Drawing M41970.03

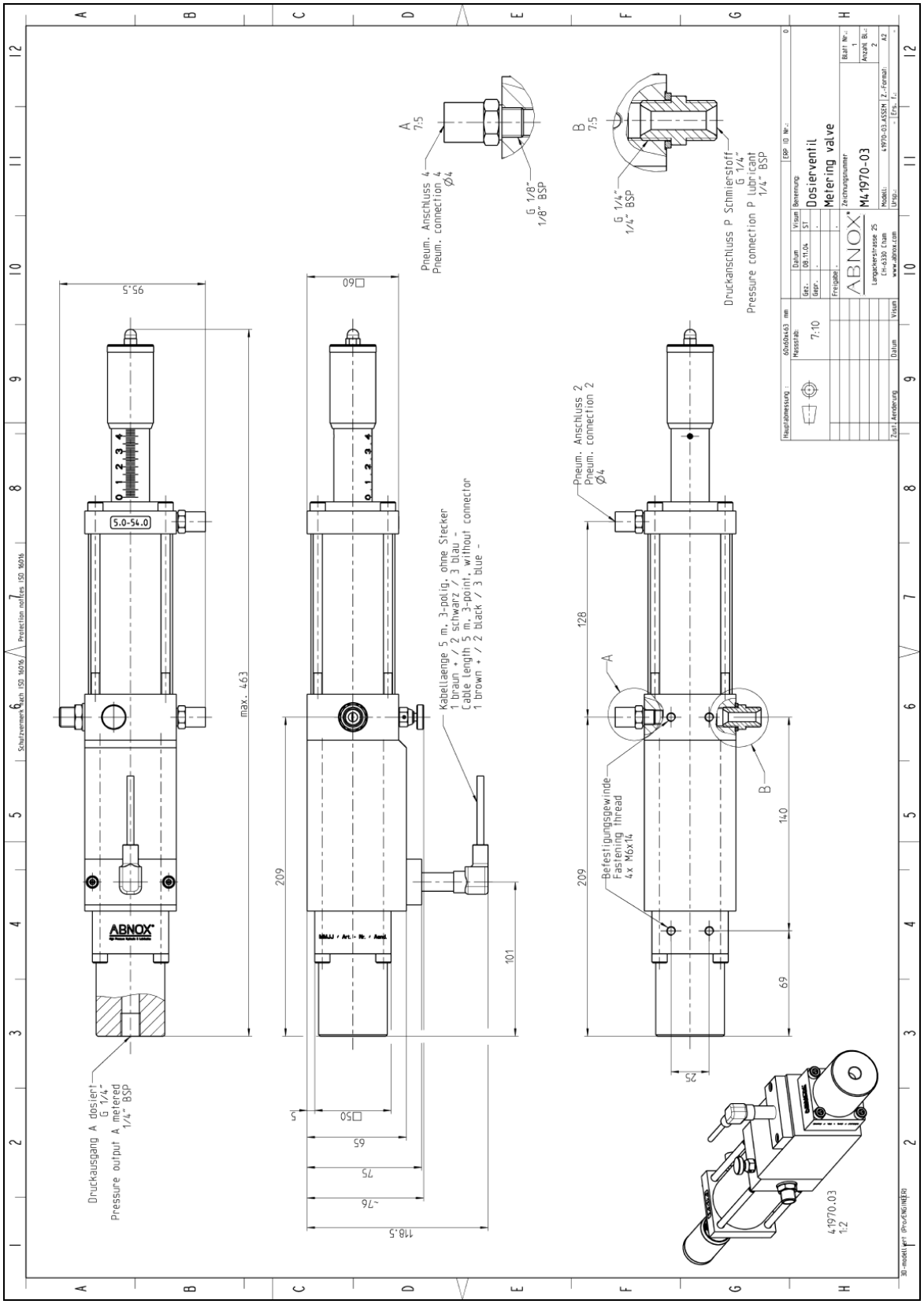

Drawing of Spare Parts E41970.03

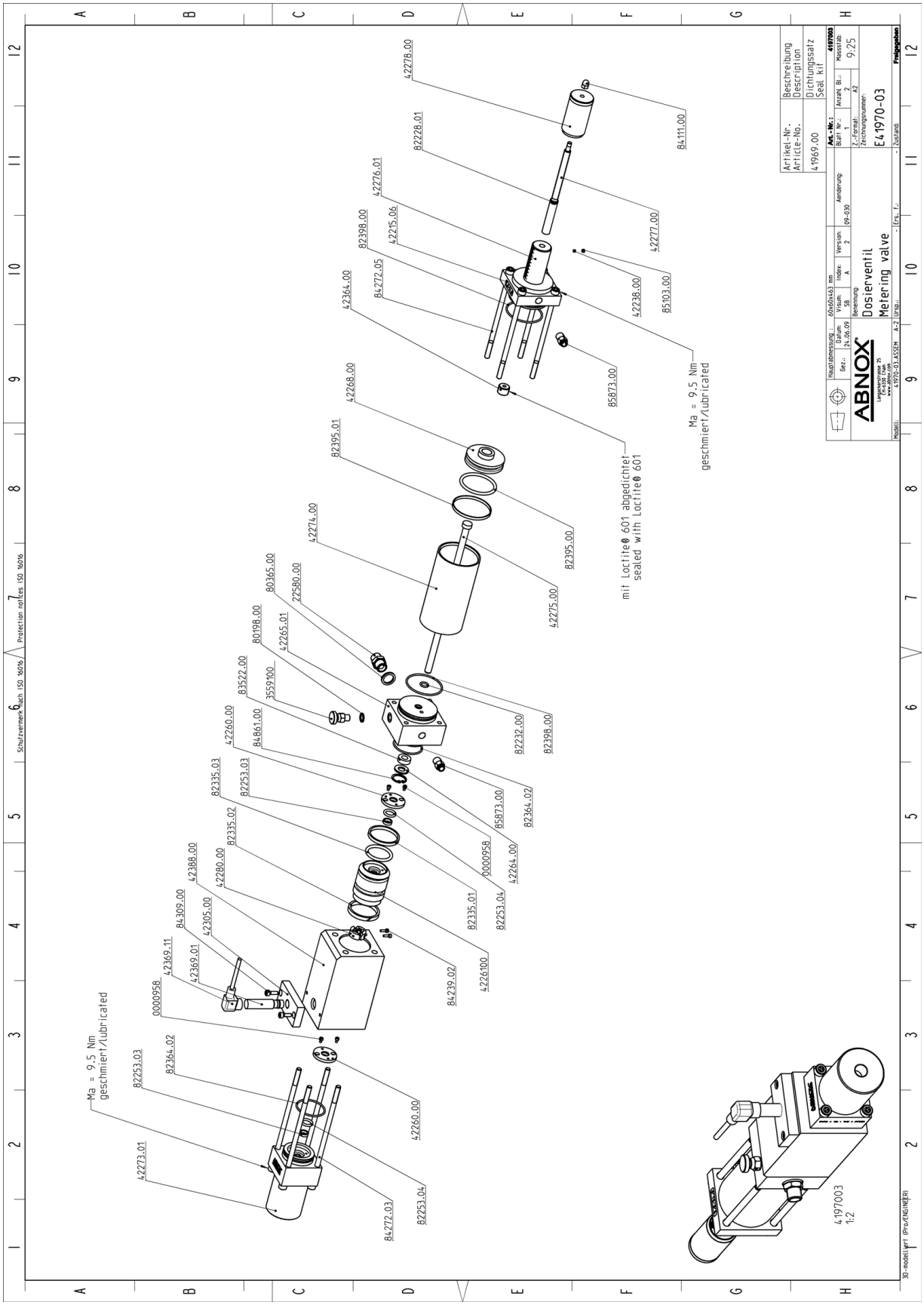

ABNOX®
High Pressure Hydraulic & Lubrication

List of Spare Parts E41970.03

Art-Nr./Art-No.	Bezeichnung	Description	Menge/pieces
0000958	Zylinderschraube	Hexagon screw	4
0004850	Gewindestück	Connecting piece	1
35591.00	Entlüftungsventil	Air release valve	1
41969.00	Dichtungssatz	Seal kit	1
42215.06	Schild 5.00-54.00	Sign 5.00-54.00	1
42238.00	Gummistück	Rubber stopper	1
42260.00	Dichtscheibe	Sealing disc	2
42261.00	Dosierkolben	Metering piston	1
42264.00	Scheibe	Disc	1
42265.01	Mittelstück	Centerpiece	1
42268.00	Steuerkolben	Control piston	1
42273.01	Anschlussstück	Connecting piece	1
42274.00	Zylinder	Cylinder	1
42275.00	Ventilstange	Valve rod	1
42276.01	Endstück	End section	1
42277.00	Dosierschraube	Metering screw	1
42278.00	Regulierhülse	Metering sleeve	1
42280.00	Stellring Paar	Set collar	1
42305.00	Halter	Holder	1
42364.00	Gewindestift	Set screw	1
42369.01	Iinduktiver Sensor	Inductive sensor	1
42369.11	Sensor Kabel	Sensor cable	1
42388.00	Zylinder	Cylinder	1
80198.00	Dichtung	Seal	1
80365.00	Dichtung	Seal	1
82228.01	O-Ring	O-ring	1
82232.00	O-Ring	O-ring	1
82253.03	Glydring	Glydring	2
82253.04	O-Ring	O-ring	2
82335.01	Glydring	Glydring	1
82335.02	Slydring	Slydring	1
82335.03	O-Ring	O-ring	1
82364.02	O-Ring	O-ring	2
82395.00	O-Ring	O-ring	1
82395.01	Glydring	Glydring	1
82398.00	O-Ring	O-ring	2
83522.00	Nutring	Slotring	1
84111.00	Hutmutter	Cap nut	1
84272.03	Zylinderschraube	Hexagon screw	4
84272.05	Zylinderschraube	Hexagon screw	4
84309.00	Zylinderschraube	Hexagon screw	2

84861.00	Sicherungsring	Retaining ring	1
85103.00	Gewindestift	Set screw	1
85873.00	Schnellverschraubung	Fitting	2

Drawing Set 41970.04

Dimensioned Drawing M41970.04

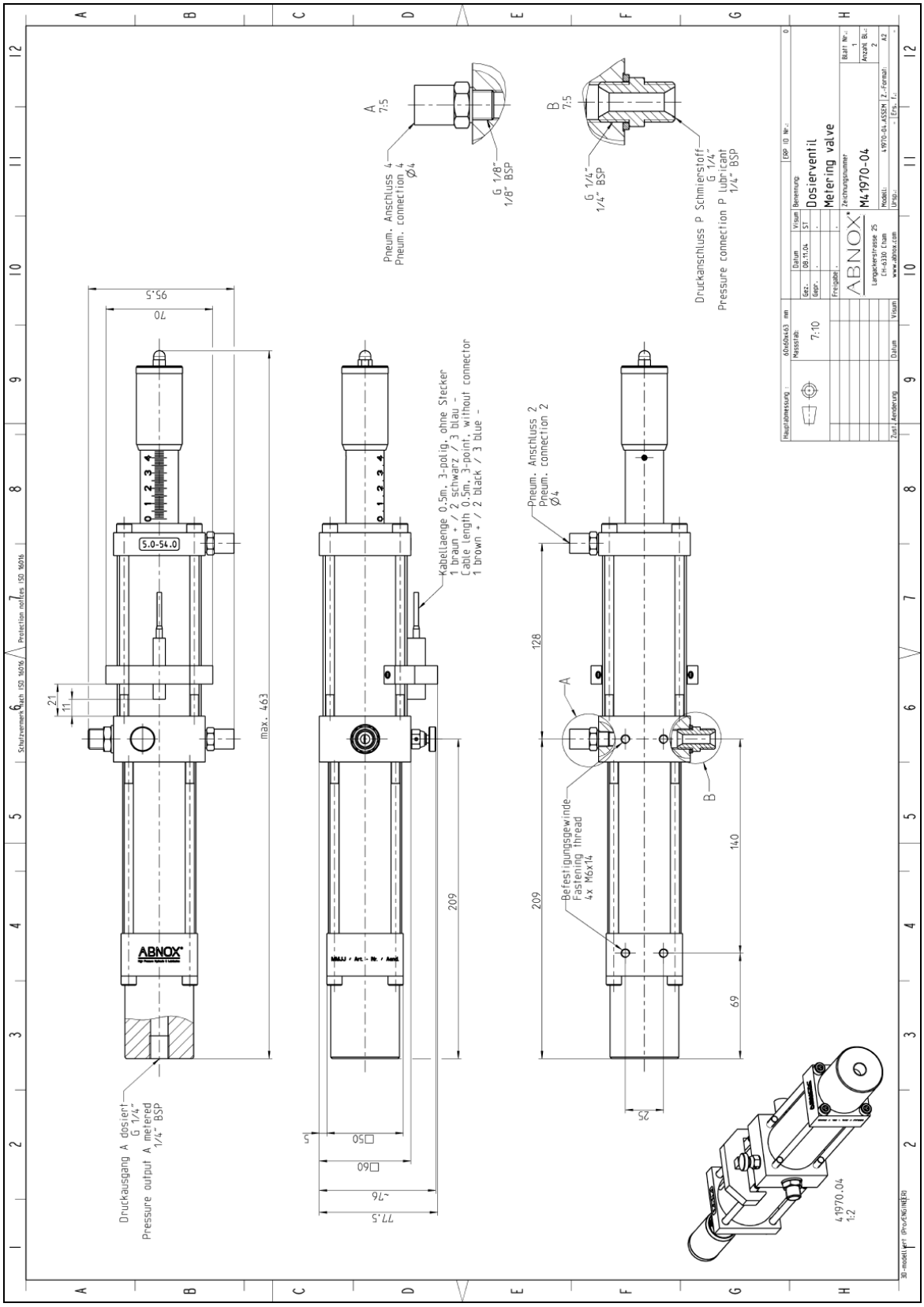

Drawing of Spare Parts E41970.04

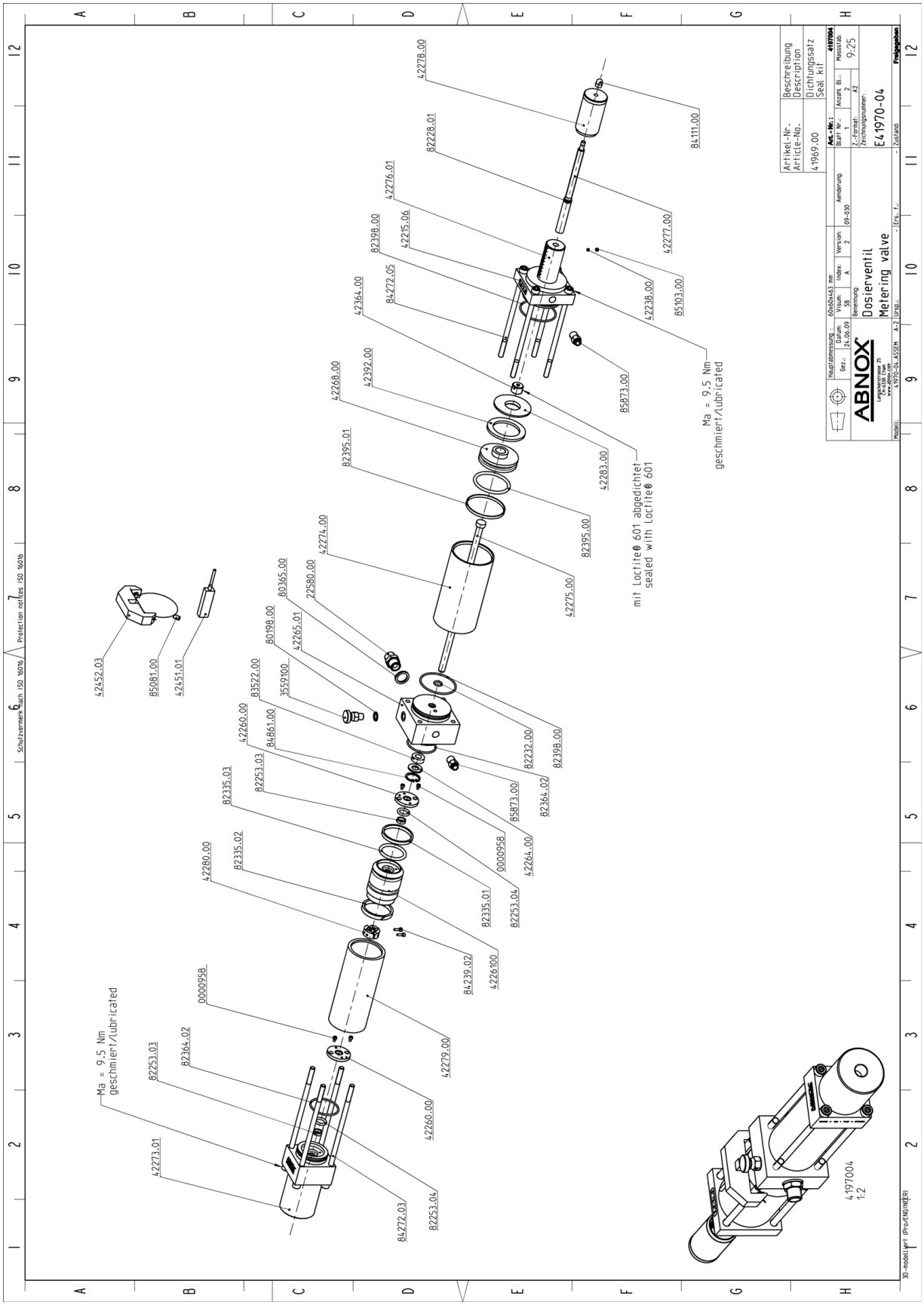

ABNOX®
High Pressure Hydraulic & Lubrication

List of Spare Parts E41970.04

Art-Nr./Art-No.	Bezeichnung	Description	Menge/pieces
0000958	Zylinderschraube	Hexagon screw	4
0004850	Gewindestück	Connecting piece	1
35591.00	Entlüftungsventil	Air release valve	1
41969.00	Dichtungssatz	Seal kit	1
42215.06	Schild 5.00-54.00	Sign 5.00-54.00	1
42238.00	Gummistück	Rubber stopper	1
42260.00	Dichtscheibe	Sealing disc	2
42261.00	Dosierkolben	Metering piston	1
42264.00	Scheibe	Disc	1
42265.01	Mittelstück	Centerpiece	1
42268.00	Steuerkolben	Control piston	1
42273.01	Anschlussstück	Connecting piece	1
42274.00	Zylinder	Cylinder	1
42275.00	Ventilstange	Valve rod	1
42276.01	Endstück	End section	1
42277.00	Dosierschraube	Metering screw	1
42278.00	Regulierhülse	Metering sleeve	1
42279.00	Druckzylinder	Hydraulic cylinder	1
42280.00	Stellring Paar	Set collar	1
42283.00	Ring	Ring	1
42364.00	Gewindestift	Set screw	1
42392.00	Plastikmagnet	Magnetic ring	1
42451.01	Pneumatikzylinderschalter	Switch	1
42452.03	Klampen	Clamp	1
80198.00	Dichtung	Seal	1
80365.00	Dichtung	Seal	1
82228.01	O-Ring	O-ring	1
82232.00	O-Ring	O-ring	1
82253.03	Glydring	Glydring	2
82253.04	O-Ring	O-ring	2
82335.01	Glydring	Glydring	1
82335.02	Slydring	Slydring	1
82335.03	O-Ring	O-ring	1
82364.02	O-Ring	O-ring	2
82395.00	O-Ring	O-ring	1
82395.01	Glydring	Glydring	1
82398.00	O-Ring	O-ring	2
83522.00	Nutring	Slotring	1
84111.00	Hutmutter	Cap nut	1
84239.02	Zylinderschraube	Hexagon screw	2
84272.03	Zylinderschraube	Hexagon screw	4

84272.05	Zylinderschraube	Hexagon screw	4
84861.00	Sicherungsring	Retaining ring	1
85081.00	Gewindestift	Set screw	2
85103.00	Gewindestift	Set screw	1
85873.00	Schnellverschraubung	Fitting	2